Sales Code: LXY009 **Barcode:** 5056817726034 **Brand:** nuie Lux **Description:** nuie lux Dual Flush Concealed Cistern With Frame



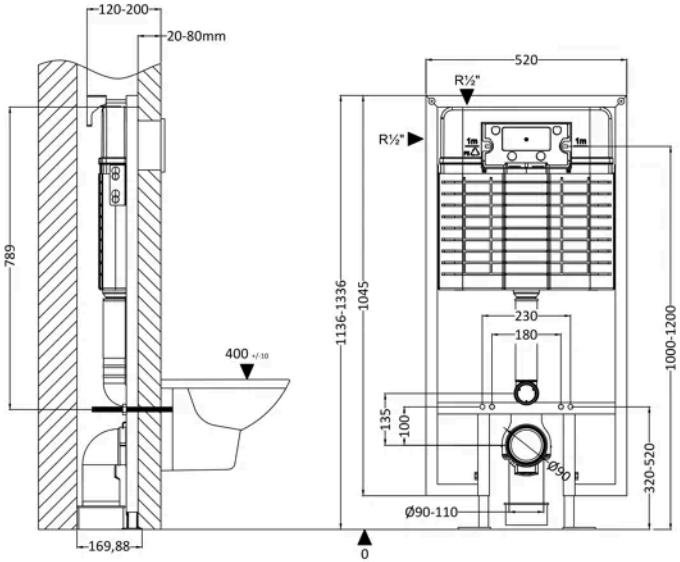

Product Dimensions

Product	1136 x 520 x 204mm (H x W x D)
Packaged	1125 x 560 x 160mm (H x W x D)
Nett Weight	11.17 kg
Packaged Weight	11.17 kg

Packaging Details

Box Qty	1

Product Details

Country of Origin	China
Product Material	Stainless Steel
Colour/Finish	Chrome
Style	Contemporary

© ROXOR Group