Sales Code: LXWHF **Barcode:** 5056817726119 **Brand:** nuie Lux **Description:** nuie lux Matt White Standard Wall Hung Support Frame



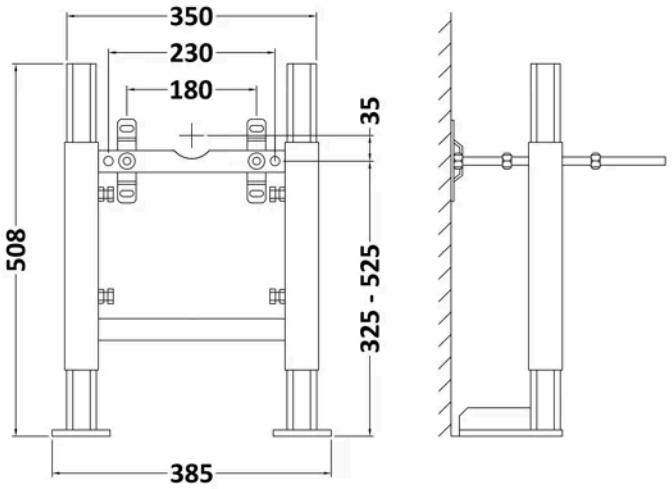

Product Dimensions

Product	355 x 370 x 510mm (H x W x D)
Packaged	850 x 510 x 195mm (H x W x D)
Nett Weight	10.5 kg
Packaged Weight	10.5 kg

Packaging Details

Box Qty	1
Label Size (mm)	50 x 100
Label Colour	White
Label Qty	2.0000

Product Details

Country of Origin	United Kingdom
Product Material	Galvanised Steel
Colour/Finish	Matt White
Style	Contemporary
Ce Certified	No
Ukca Certified	No

© ROXOR Group