Sales Code: LXTPB02 **Barcode:** 5056817725976 **Brand:** nuie Lux **Description:** nuie lux Traditional Black Dual Flush Push Button



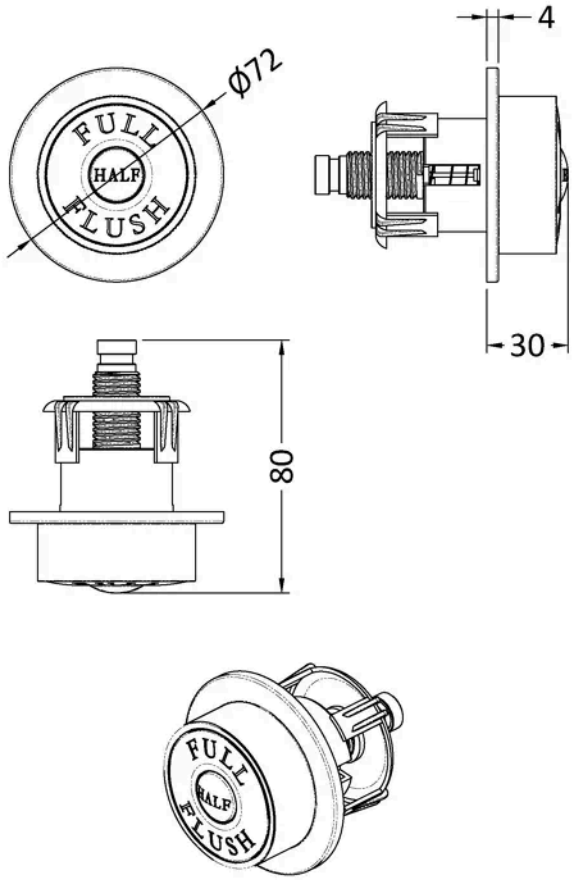

Product Dimensions

Product	72 x 72 x 85mm (H x W x D)
Packaged	80 x 155 x 50mm (H x W x D)
Nett Weight	0.2 kg
Packaged Weight	0.2 kg

Packaging Details

Box Qty	1
Label Size (mm)	50 x 100
Label Colour	White
Label Qty	1.0000

Product Details

Country of Origin	China
Product Material	Abs
Colour/Finish	Black
Style	Traditional
Fixings Included	Yes
Product Diameter	72 mm

© ROXOR Group