Sales Code: LXSR864

Barcode: 5056883737248

Brand: nuie Lux

Description: nuie lux Brushed Brass Outlet Elbow, Parking Bracket, Flex And Handset Parking Bracket Kit



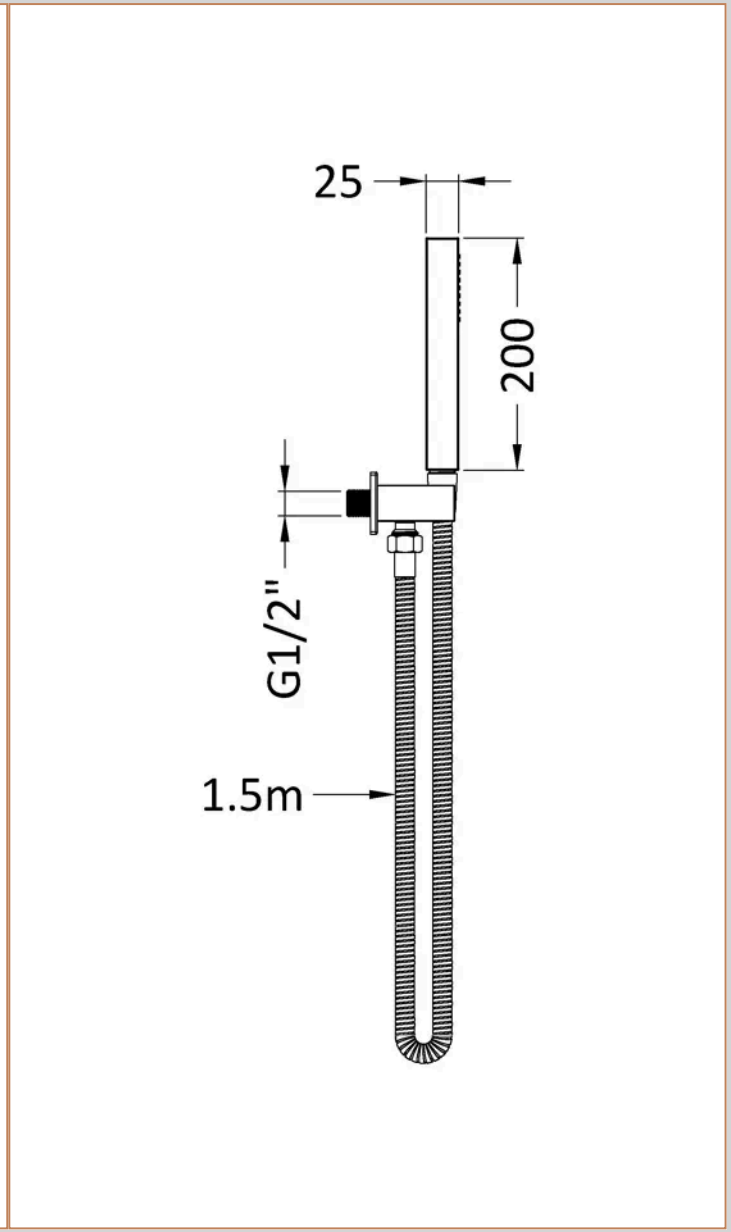

Product Dimensions

Product	1265 x 30 x 55mm (H x W x D)
Packaged	130 x 185 x 275mm (H x W x D)
Outer Box	410 x 320 x 440mm (H x W x D)
Nett Weight	0.68 kg
Packaged Weight	0.68 kg

Packaging Details

Box Qty	1
Label Size (mm)	50 x 100
Label Colour	White
Label Qty	2.0000

Product Details

Country of Origin	China
Product Material	Brass Abs
Control Type	Not Applicable
WRAS Approved	No
Colour/Finish	Brushed Brass
Mount Type	Surface/Wall
Style	Contemporary
TMV2 Approved	No
TMV3 Approved	No
Handset Included	Yes
Head Included	No
Hose Included	Yes
Hose Length	1500 mm
Min Operating Pressure	0.1 Bar
Outlet Elbow Supplied	Yes

© ROXOR Group