Sales Code: LXSR463 **Barcode:** 5056883737088 **Brand:** nuie Lux **Description:** nuie lux Matt Black Outlet Elbow, Parking Bracket, Flex And Handset Parking Bracket Kit

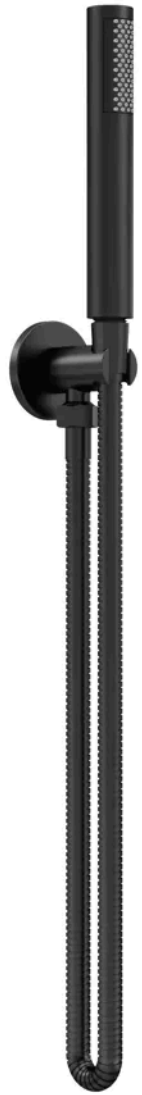

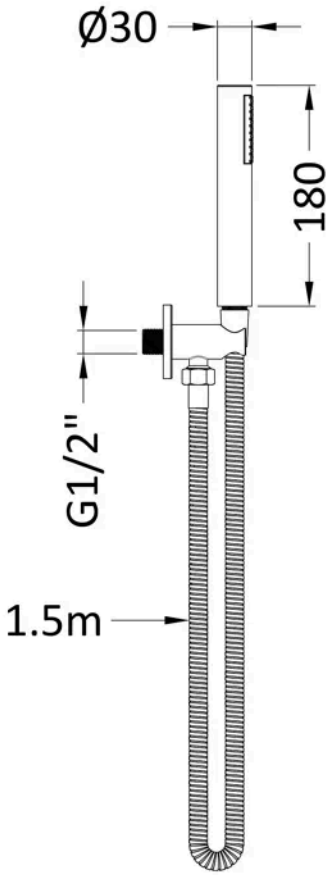

Product Dimensions

Product	1230 x 30 x 55mm (H x W x D)
Packaged	140 x 200 x 275mm (H x W x D)
Outer Box	410 x 320 x 440mm (H x W x D)
Nett Weight	0.62 kg
Packaged Weight	0.62 kg

Packaging Details

Box Qty	1
Label Size (mm)	50 x 100
Label Colour	White
Label Qty	2.0000

Product Details

Country of Origin	China
Product Material	Brass Abs
Control Type	Not Applicable
WRAS Approved	No
Colour/Finish	Matt Black
Mount Type	Surface/Wall
Style	Contemporary
TMV2 Approved	No
TMV3 Approved	No
Handset Included	Yes
Head Included	No
Hose Included	Yes
Hose Length	1500 mm
Min Operating Pressure	0.1 Bar
Outlet Elbow Supplied	Yes

© ROXOR Group