**Sales Code:** LXSPB03 **Barcode:** 5056817725945 **Brand:** nuie Lux **Description:** nuie lux Square Brushed Brass Dual Flush Push Button

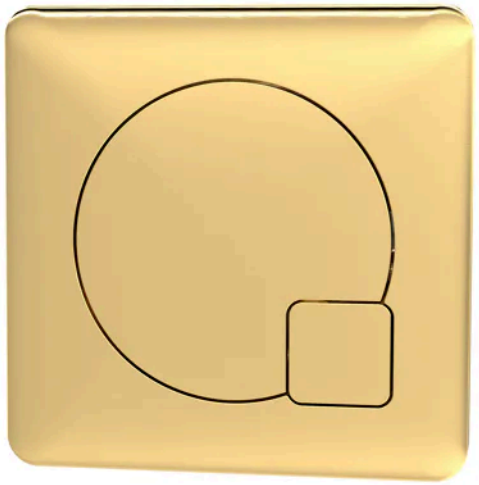

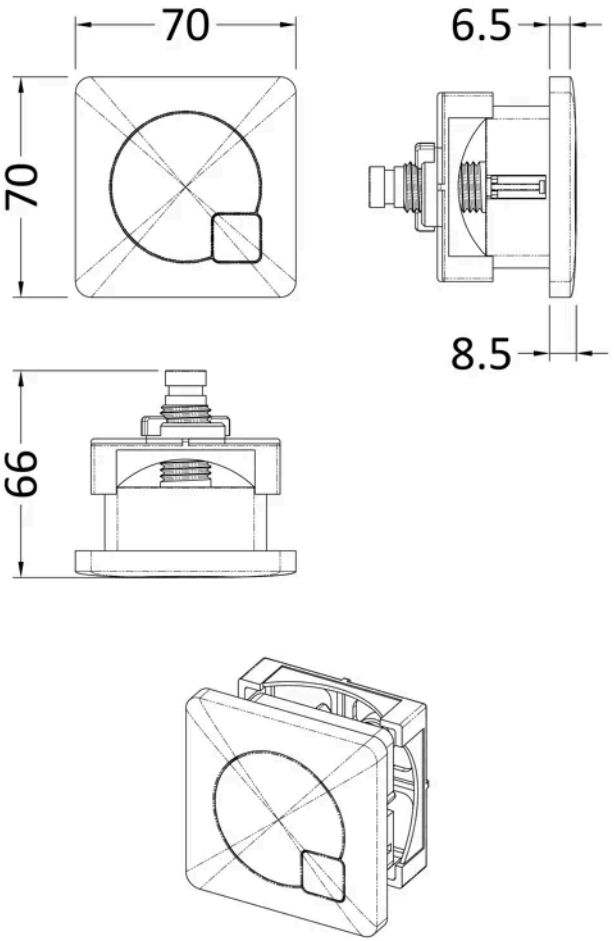


## Product Dimensions

| | |
|---|---|
| Product | 70 x 70 x 99mm (H x W x D) |
| Packaged | 80 x 155 x 80mm (H x W x D) |
| Nett Weight | 0.2 kg |
| Packaged Weight | 0.2 kg |

## Packaging Details

| | |
|---|---|
| Box Qty | 1 |
| Label Size (mm) | 50 x 100 |
| Label Colour | White |
| Label Qty | 1.0000 |

## Product Details

| | |
|---|---|
| Country of Origin | China |
| Product Material | Abs |
| Colour/Finish | Brushed Brass |
| Style | Contemporary |
| Fixings Included | Yes |

© ROXOR Group