Sales Code: LXRB305A **Barcode:** 5056817724993 **Brand:** nuie Lux **Description:** nuie lux 1 Tap Hole 520mm Ceramic Round Semi-Recessed Basin



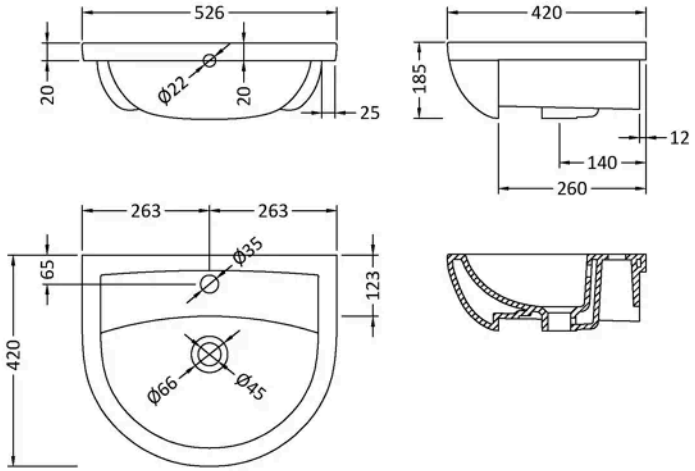

Product Dimensions

Product	170 x 500 x 390mm (H x W x D)
Packaged	220 x 540 x 440mm (H x W x D)
Nett Weight	12.4 kg
Packaged Weight	13 kg

Product Details

Country of Origin	China
Product Material	Vitreous China
Colour/Finish	White
Style	Contemporary
Fixings Included	No
Ce Certified	Yes
Inner Bowl Depth	277 mm
Inner Bowl Height	105 mm
Inner Bowl Width	486 mm
No. Of Tapholes	1
Number Of Bowls	1
Overflow Cover Included	Yes
Overflow Included	Yes
Tap Included	No
Waste Included	No

© ROXOR Group