Sales Code: LXPB613L **Barcode:** 5056817724900 **Brand:** nuie Lux **Description:** nuie lux 1 Tap Hole 1100mm Square Left Hand Polymarble Semi-Recessed Basin

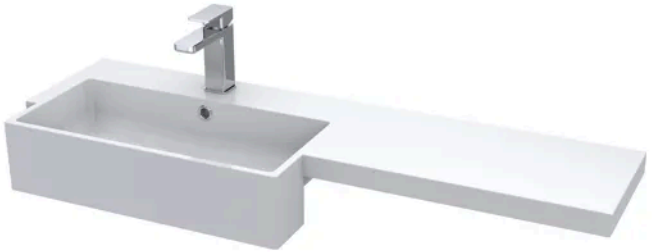

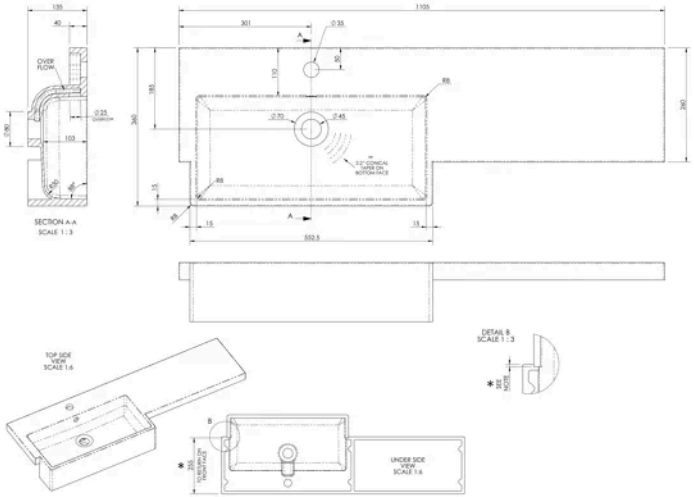

Product Dimensions

Product	135 x 1105 x 360mm (H x W x D)
Packaged	190 x 420 x 1160mm (H x W x D)
Nett Weight	16 kg
Packaged Weight	16 kg

Packaging Details

Box Qty	1

Product Details

Country of Origin	China
Product Material	Polymarble
Colour/Finish	White
Style	Contemporary
Ce Certified	Yes
No. Of Tapholes	1

© ROXOR Group