Sales Code: LXPB302 **Barcode:** 5056817724580 **Brand:** nuie Lux **Description:** nuie lux 1 Tap Hole 500mm Compact Polymarble Basin



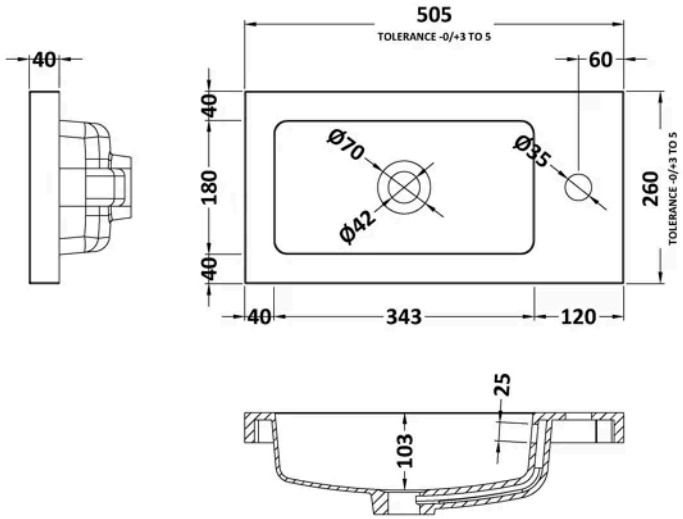

Product Dimensions

Product	255 x 503 x 135mm (H x W x D)
Packaged	305 x 205 x 555mm (H x W x D)
Nett Weight	8 kg
Packaged Weight	8 kg

Packaging Details

Box Qty	1

Product Details

Country of Origin	China
Product Material	Polymarble
Colour/Finish	White
Style	Contemporary
Ce Certified	Yes
Inner Bowl Height	103 mm
No. Of Tapholes	1
Number Of Bowls	1
Overflow Included	Yes
Tap Included	No
Waste Included	No

© ROXOR Group