Sales Code: LXHM005 **Barcode:** 5056817728632 **Brand:** nuie Lux **Description:** nuie lux Back To Wall Pan Round With Seat



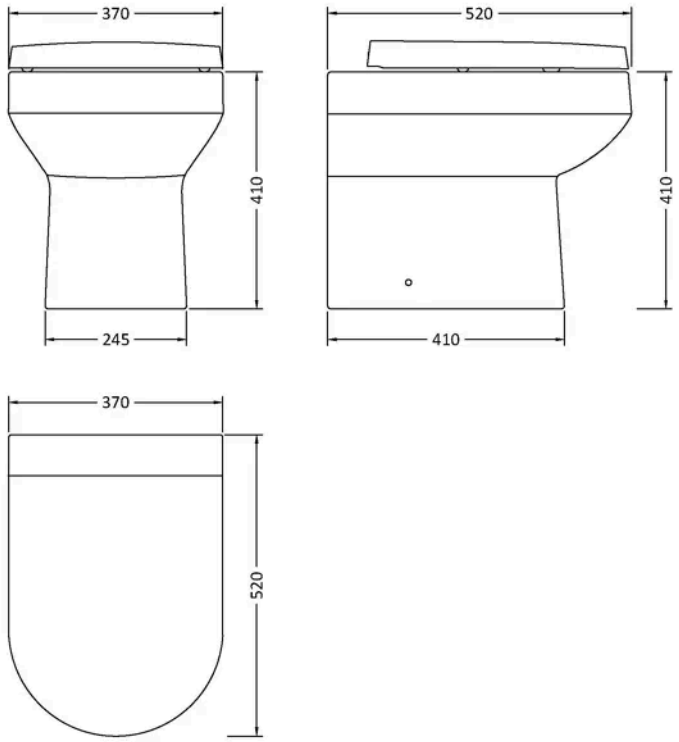

Product Dimensions

Product	410 x 370 x 520mm (H x W x D)
Packaged	570 x 415 x 365mm (H x W x D)
Nett Weight	27.34 kg
Packaged Weight	27.34 kg

Product Details

Country of Origin	China
Product Material	Vitreous China
Colour/Finish	Gloss White
Style	Contemporary
Ce Certified	Yes
Includes Seat	Yes
Pan Type	Back To Wall

© ROXOR Group

Sales Code: LXCH606 **Barcode:** 5056817725761 **Brand:** nuie Lux **Description:** nuie lux Back to Wall Toilet Pan



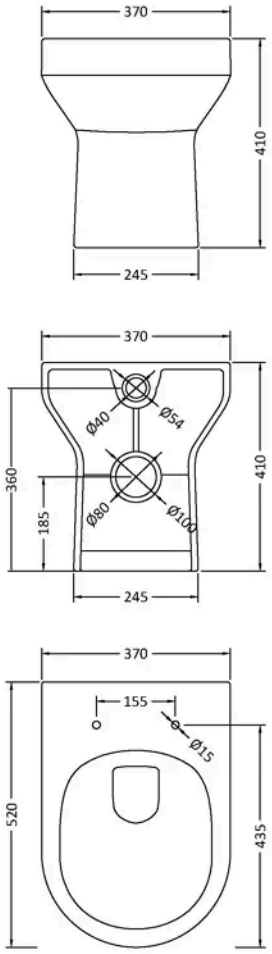

Product Dimensions

Product	410 x 370 x 520mm (H x W x D)
Packaged	408 x 375 x 530mm (H x W x D)
Nett Weight	24.5 kg
Packaged Weight	25 kg

Product Details

Country of Origin	China
Product Material	Vitreous China
Colour/Finish	White
Style	Contemporary
Ce Certified	Yes
Includes Seat	No
Pan Trap Style	P-Trap
Pan Type	Back To Wall

© ROXOR Group

Sales Code: LXTS007 **Barcode:** 5056817725778 **Brand:** nuie Lux **Description:** nuie lux White D-Shaped Soft Close Toilet Seat With Quick Release Hinge



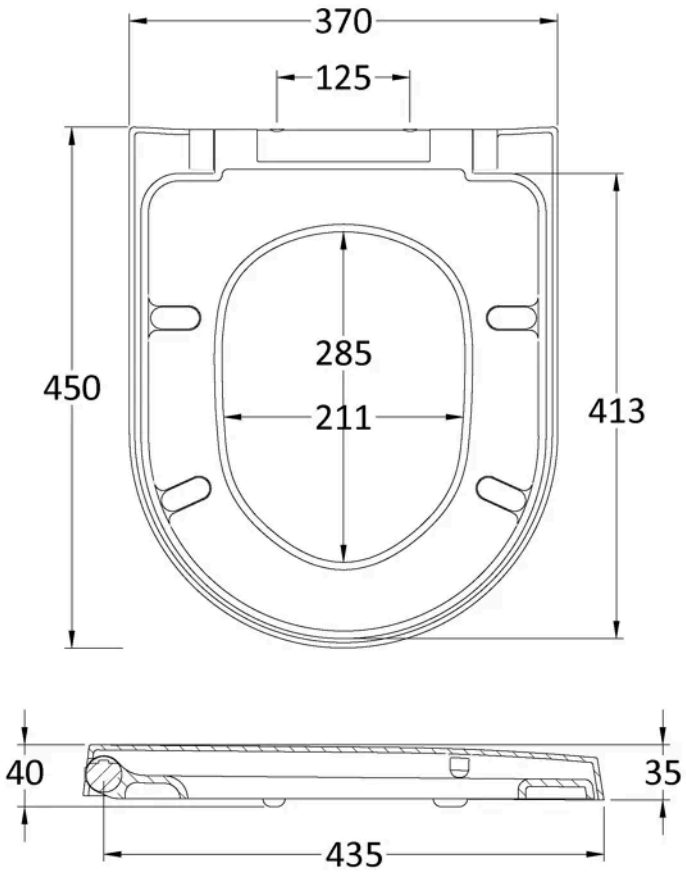

Product Dimensions

Product	40 x 370 x 450mm (H x W x D)
Packaged	377 x 50 x 469mm (H x W x D)
Outer Box	395mm (H)
Nett Weight	2.12 kg
Packaged Weight	2.3 kg

Packaging Details

Box Qty	1
Label Size (mm)	50 x 100

Product Details

Country of Origin	China
Product Material	Stainless Steel Nylon,Urea
Colour/Finish	White
Style	Contemporary
Fixings Included	Yes
Ce Certified	No
Declaration Of Performance	No
Hinge Centres (Max)	175 mm
Hinge Centres (Min)	70 mm
Toilet Seat Function	Soft Close
Toilet Seat Hinge Type	Quick Release
Toilet Seat Type	D Shape

© ROXOR Group