Sales Code: LXE860 **Barcode:** 5056817725853 **Brand:** nuie Lux **Description:** nuie lux Brushed Brass Lever Handle For Close Coupled/Low Level Cistern

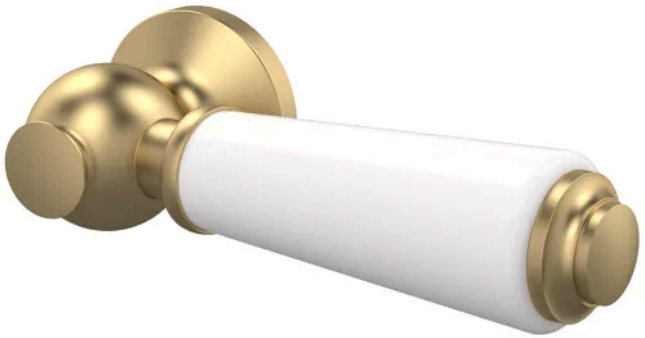

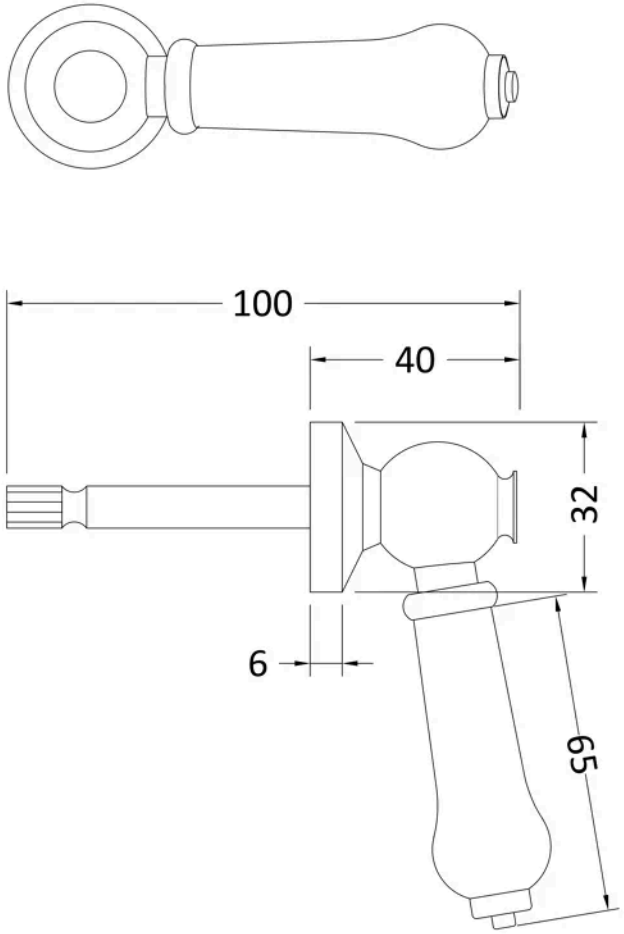

Product Dimensions

Product	165 x 32 x 99mm (H x W x D)
Packaged	30 x 110 x 180mm (H x W x D)
Nett Weight	0.2 kg
Packaged Weight	0.25 kg

Product Details

Country of Origin	China
Product Material	Brass Ceramic
Colour/Finish	Brushed Brass
Style	Traditional

© ROXOR Group