Sales Code: LXCU799 **Barcode:** 5056817725730 **Brand:** nuie Lux **Description:** nuie lux White Square Soft Close Toilet Seat With Top Fix Hinge



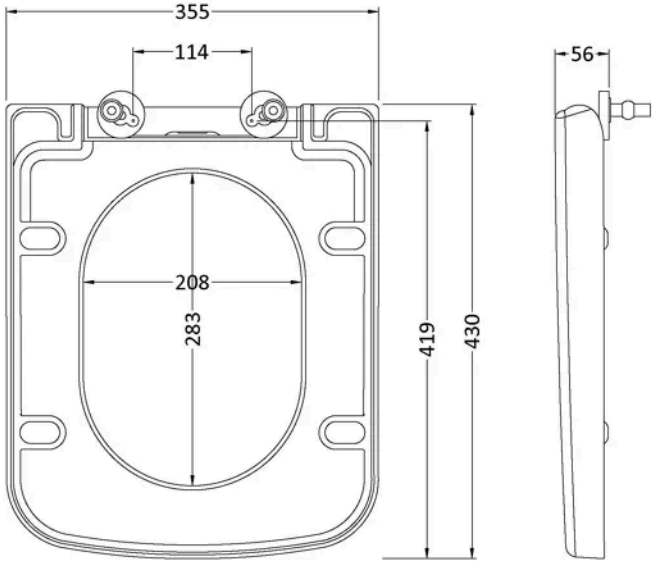

Product Dimensions

Product	56 x 355 x 430mm (H x W x D)
Packaged	50 x 500 x 365mm (H x W x D)
Outer Box	480mm (H)
Nett Weight	2.5 kg
Packaged Weight	2.75 kg

Packaging Details

Box Qty	1
Label Size (mm)	50 x 100
Label Qty	1.0000

Product Details

Country of Origin	Turkey
Product Material	Polypropylene
Colour/Finish	White
Style	Contemporary
Fixings Included	Yes
Hinge Centres (Max)	186 mm
Hinge Centres (Min)	150 mm
Toilet Seat Function	Soft Close
Toilet Seat Hinge Type	Top Fix
Toilet Seat Type	Square

© ROXOR Group