**Sales Code:** LXCG506 **Barcode:** 5056817729776 **Brand:** nuie Lux **Description:** nuie lux Square Rimless Back to Wall Pan With Soft Close Seat



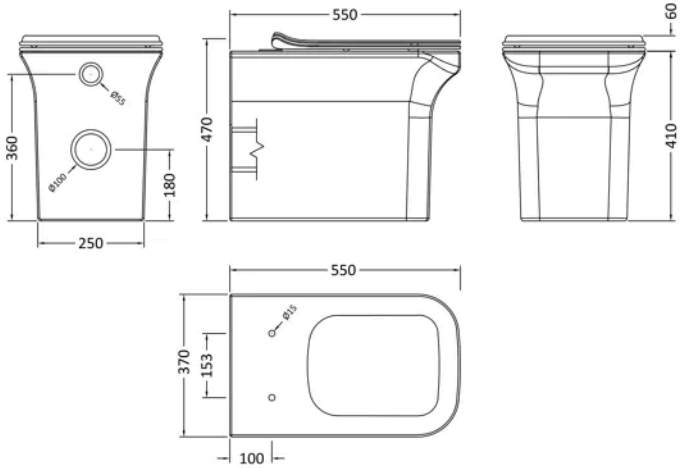


## Product Dimensions

| | |
|---|---|
| Product | 470 x 370 x 550mm (H x W x D) |
| Packaged | 445 x 445 x 570mm (H x W x D) |
| Nett Weight | 22 kg |
| Packaged Weight | 22.59 kg |

## Product Details

| | |
|---|---|
| Country of Origin | China |
| Product Material | Vitreous China |
| Colour/Finish | White |
| Style | Contemporary |
| Ce Certified | Yes |
| Includes Seat | Yes |
| Pan Type | Back To Wall |

© ROXOR Group