**Sales Code:** LXBW001 **Barcode:** 5056817728618 **Brand:** nuie Lux **Description:** nuie lux Back To Wall Round Pan With Seat



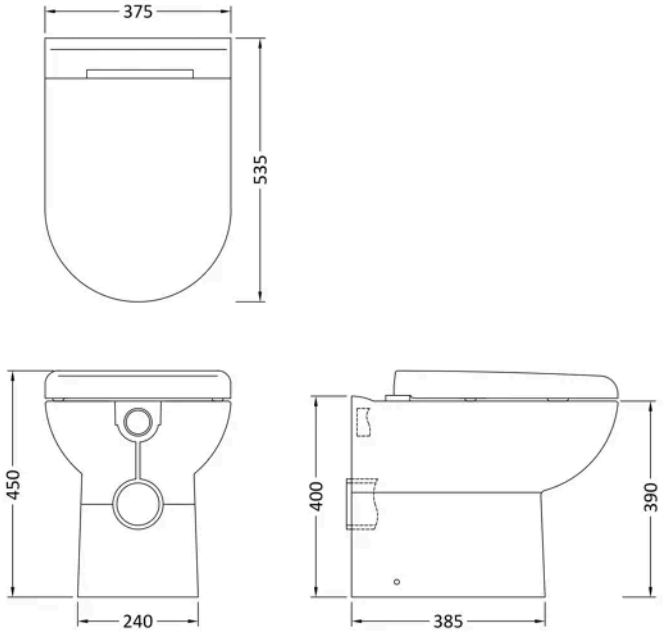


## Product Dimensions

| | |
|---|---|
| Product | 450 x 375 x 535mm (H x W x D) |
| Packaged | 420 x 395 x 540mm (H x W x D) |
| Nett Weight | 24.62 kg |
| Packaged Weight | 24.62 kg |

## Product Details

| | |
|---|---|
| Country of Origin | China |
| Product Material | Vitreous China |
| Colour/Finish | Gloss White |
| Style | Contemporary |
| Ce Certified | Yes |
| Includes Seat | Yes |
| Pan Type | Back To Wall |

© ROXOR Group

**Sales Code:** LXBW005 **Barcode:** 5056817725785 **Brand:** nuie Lux **Description:** nuie lux Back to Wall Toilet Pan



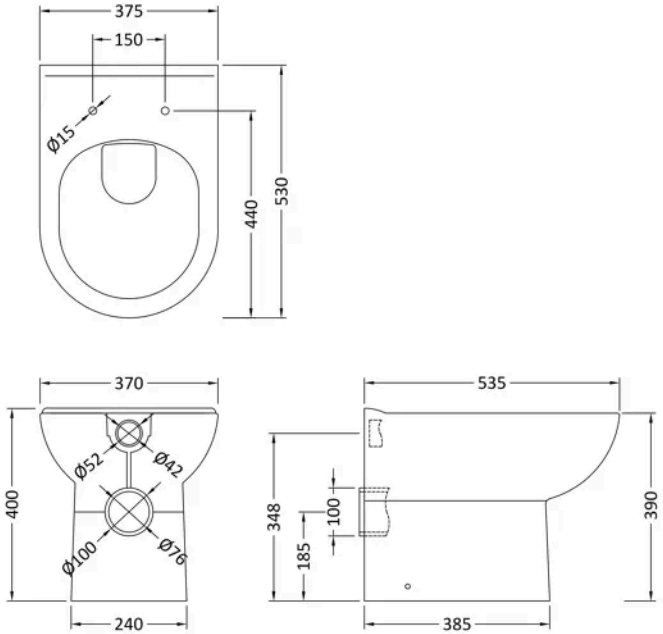


## Product Dimensions

| | |
|---|---|
| Product | 390 x 375 x 535mm (H x W x D) |
| Packaged | 420 x 395 x 540mm (H x W x D) |
| Nett Weight | 22.1 kg |
| Packaged Weight | 22.6 kg |

## Product Details

| | |
|---|---|
| Country of Origin | China |
| Product Material | Vitreous China |
| Colour/Finish | White |
| Style | Contemporary |
| Ce Certified | Yes |
| Includes Seat | No |
| Pan Type | Back To Wall |

© ROXOR Group

**Sales Code:** LXTS002 **Barcode:** 5056817725792 **Brand:** nuie Lux **Description:** nuie lux White D-Shaped Soft Close Toilet Seat With Top Fix Hinge



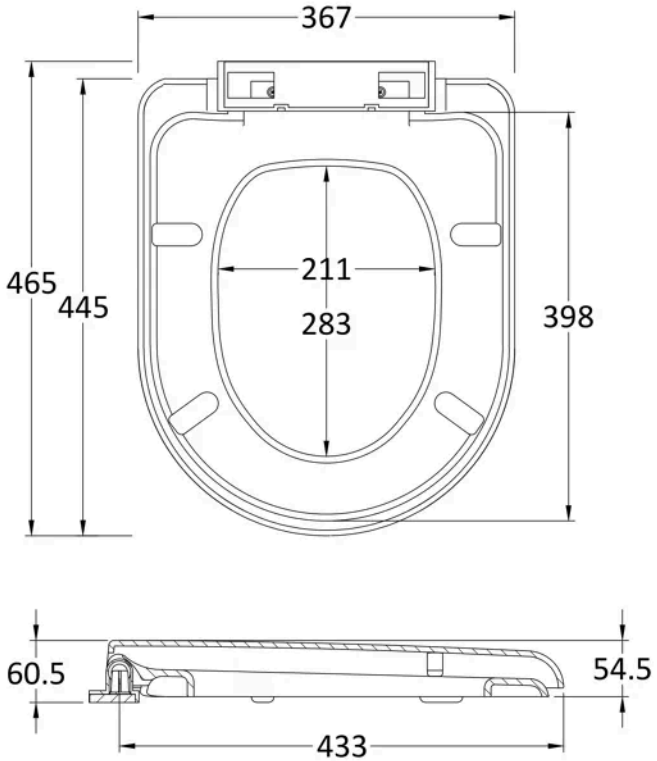


## Product Dimensions

| | |
|---|---|
| Product | 47 x 365 x 465mm (H x W x D) |
| Packaged | 55 x 380 x 465mm (H x W x D) |
| Outer Box | 400mm (H) |
| Nett Weight | 1.84 kg |
| Packaged Weight | 2.02 kg |

## Packaging Details

| | |
|---|---|
| Label Size (mm) | 50 x 100 |

## Product Details

| | |
|---|---|
| Country of Origin | China |
| Product Material | Polypropylene |
| Colour/Finish | White |
| Style | Contemporary |
| Fixings Included | Yes |
| Ce Certified | No |
| Declaration Of Performance | No |
| Hinge Centres (Max) | 172 mm |
| Hinge Centres (Min) | 128 mm |
| Toilet Seat Function | Soft Close |
| Toilet Seat Hinge Type | Top Fix |
| Toilet Seat Type | D Shape |

© ROXOR Group