Sales Code: LXBV280 **Barcode:** 5056817725457 **Brand:** nuie Lux **Description:** nuie lux 465mm Matt White Ceramic Rectangular Vessel Basin



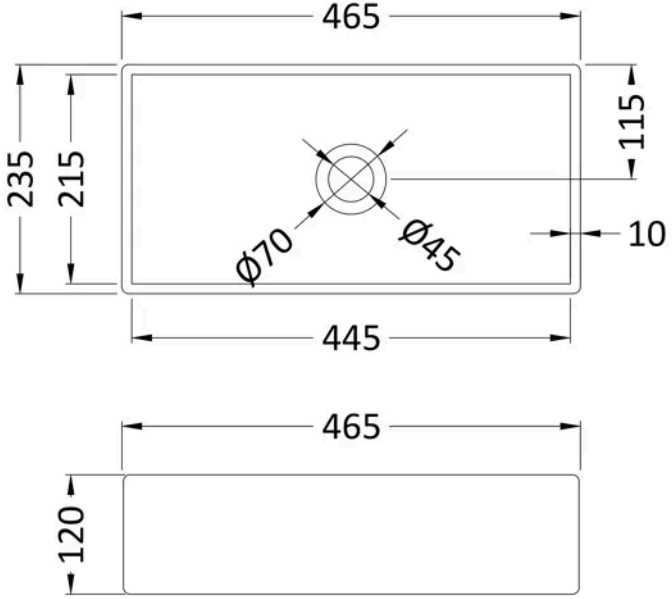

Product Dimensions

Product	120 x 465 x 235mm (H x W x D)
Packaged	135 x 475 x 245mm (H x W x D)
Nett Weight	7.5 kg
Packaged Weight	8 kg

Packaging Details

Box Qty	1

Product Details

Country of Origin	China
Product Material	Vitreous China
Colour/Finish	Matt White
Style	Contemporary
Fixings Included	No
Ce Certified	Yes
Inner Bowl Depth	215 mm
Inner Bowl Height	110 mm
Inner Bowl Width	445 mm
No. Of Tapholes	No Tapholes
Number Of Bowls	1
Overflow Cover Included	No
Overflow Included	No
Tap Included	No
Waste Included	No

© ROXOR Group