Sales Code: LXBV181 **Barcode:** 5056817725396 **Brand:** nuie Lux **Description:** nuie lux 520mm Ceramic Rectangular Vessel Basin



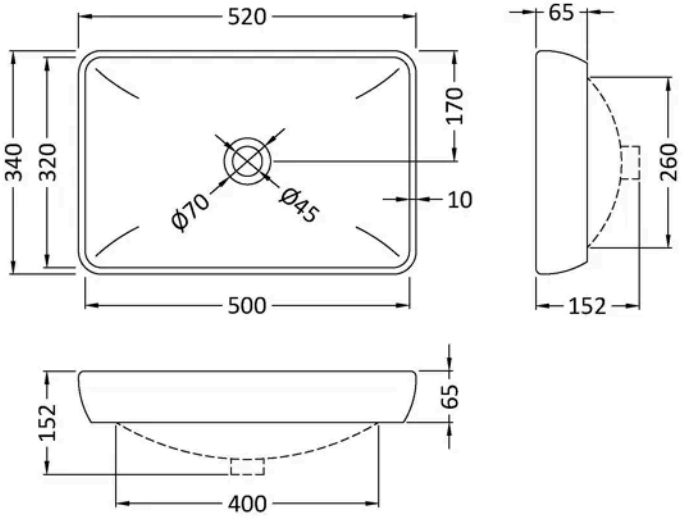

Product Dimensions

Product	152 x 520 x 340mm (H x W x D)
Packaged	170 x 530 x 355mm (H x W x D)
Nett Weight	6.5 kg
Packaged Weight	7 kg

Packaging Details

Box Qty	1

Product Details

Country of Origin	China
Product Material	Vitreous China
Colour/Finish	White
Style	Contemporary
Fixings Included	No
Ce Certified	Yes
Inner Bowl Depth	320 mm
Inner Bowl Height	142 mm
Inner Bowl Width	500 mm
No. Of Tapholes	No Tapholes
Number Of Bowls	1
Overflow Cover Included	No
Overflow Included	No
Tap Included	No
Waste Included	No

© ROXOR Group