Sales Code: LXBV158 **Barcode:** 5056817725280 **Brand:** nuie Lux **Description:** nuie lux 455mm Ceramic Rectangular Vessel Basin



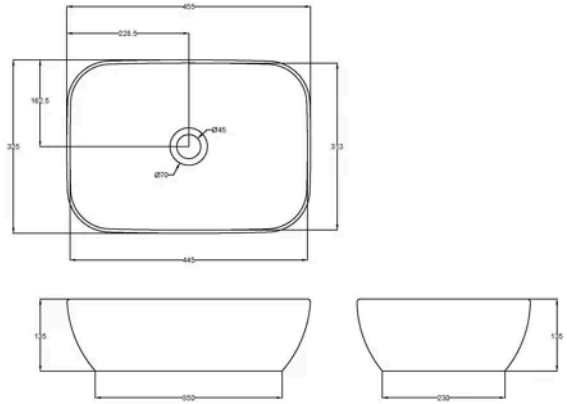

Product Dimensions

Product	135 x 455 x 325mm (H x W x D)
Packaged	155 x 345 x 475mm (H x W x D)
Nett Weight	7.8 kg
Packaged Weight	7.8 kg

Packaging Details

Box Qty	1

Product Details

Country of Origin	China
Product Material	Vitreous China
Colour/Finish	White
Style	Contemporary
Fixings Included	No
Ce Certified	Yes
Inner Bowl Depth	313 mm
Inner Bowl Height	125 mm
Inner Bowl Width	445 mm
No. Of Tapholes	No Tapholes
Number Of Bowls	1
Overflow Cover Included	No
Overflow Included	No
Tap Included	No
Waste Included	No
Waste Size Required	1.5" (70mm flange)

© ROXOR Group