Sales Code: LXBV124 **Barcode:** 5056817725273 **Brand:** nuie Lux **Description:** nuie lux 410mm Ceramic Round Vessel Basin



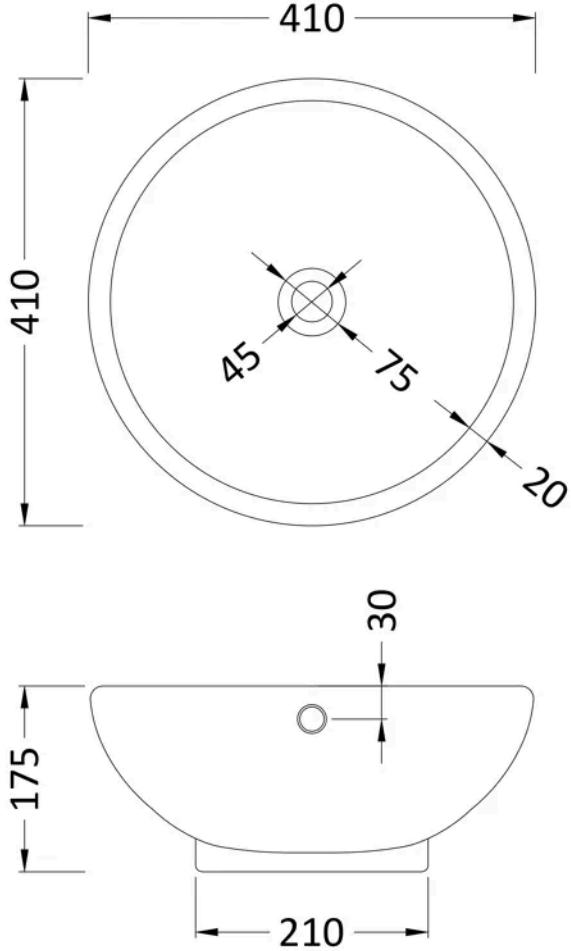

Product Dimensions

Product	175 x 410 x 410mm (H x W x D)
Packaged	195 x 440 x 440mm (H x W x D)
Nett Weight	6.8 kg
Packaged Weight	7 kg

Packaging Details

Box Qty	1

Product Details

Country of Origin	China
Product Material	Vitreous China
Colour/Finish	White
Style	Contemporary
Fixings Included	No
Ce Certified	Yes
Inner Bowl Depth	370 mm
Inner Bowl Height	120 mm
Inner Bowl Width	370 mm
No. Of Tapholes	No Tapholes
Number Of Bowls	1
Overflow Cover Included	No
Overflow Included	Yes
Tap Included	No
Waste Included	No

© ROXOR Group