Sales Code: LXBV005 **Barcode:** 5056817725228 **Brand:** nuie Lux **Description:** nuie lux 1 Tap Hole 495mm Ceramic Rectangular Vessel Basin



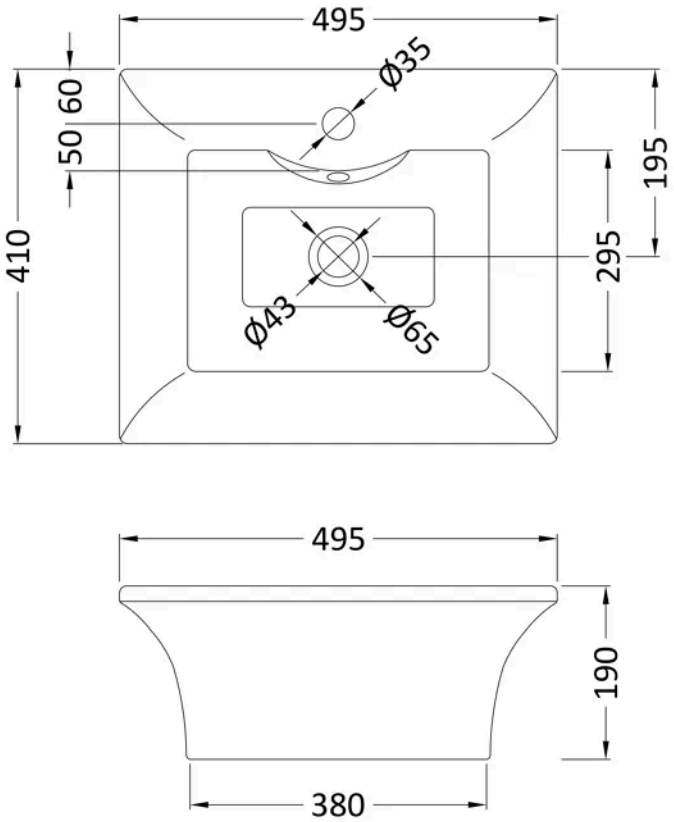

Product Dimensions

Product	190 x 495 x 410mm (H x W x D)
Packaged	210 x 515 x 430mm (H x W x D)
Nett Weight	10.8 kg
Packaged Weight	11 kg

Packaging Details

Box Qty	1

Product Details

Country of Origin	China
Product Material	Vitreous China
Colour/Finish	White
Style	Contemporary
Ce Certified	Yes
Inner Bowl Depth	295 mm
Inner Bowl Height	105 mm
Inner Bowl Width	430 mm
No. Of Tapholes	1
Number Of Bowls	1
Overflow Included	Yes
Tap Included	No
Waste Included	No

© ROXOR Group