Sales Code: LX009PR8 **Barcode:** 5056817726096 **Brand:** nuie Lux **Description:** nuie lux Round Brushed Brass Dual Flush Push Button

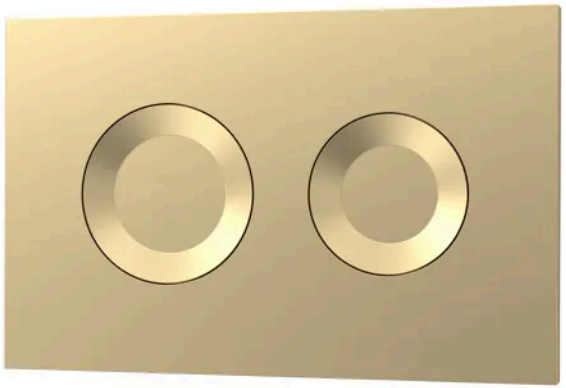

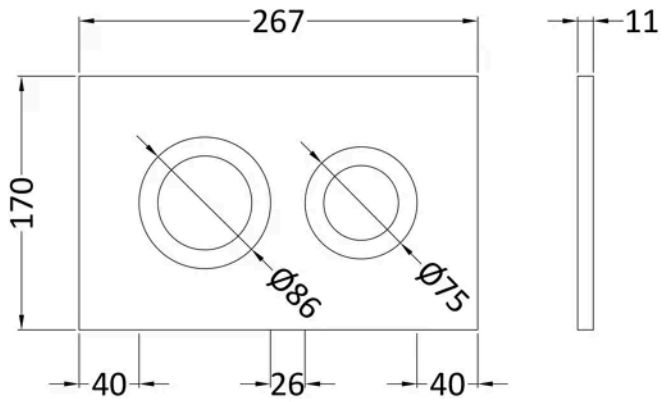

Product Dimensions

Product	170 x 267 x 11mm (H x W x D)
Packaged	50 x 220 x 290mm (H x W x D)
Nett Weight	0.5 kg
Packaged Weight	0.5 kg

Packaging Details

Box Qty	1
Label Size (mm)	50 x 100
Label Colour	White
Label Qty	2.0000

Product Details

Country of Origin	China
Product Material	Abs
Colour/Finish	Brushed Brass
Style	Contemporary
Ce Certified	Yes
Ukca Certified	Yes

© ROXOR Group