Sales Code: LUL322 **Barcode:** 5056817725556 **Brand:** nuie Lux **Description:** nuie lux Lulworth 1 Tap Hole 650mm Ceramic Basin



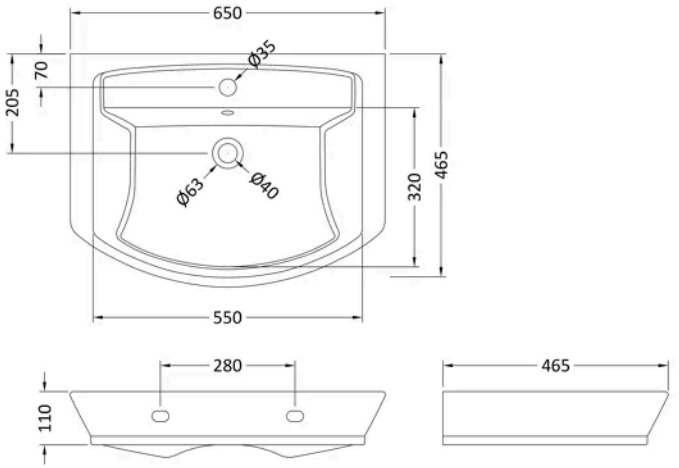

Product Dimensions

Product	110 x 650 x 465mm (H x W x D)
Packaged	725 x 190 x 495mm (H x W x D)
Nett Weight	17.8 kg
Packaged Weight	17.8 kg

Packaging Details

Box Qty	1

Product Details

Country of Origin	Turkey
Product Material	Vitreous China
Colour/Finish	White
Ce Certified	Yes
Inner Bowl Height	100 mm
No. Of Tapholes	1
Number Of Bowls	1

© ROXOR Group