Sales Code: LUL300C **Barcode:** 5056817725617 **Brand:** nuie Lux **Description:** nuie lux Lulworth Wall Hung Pan



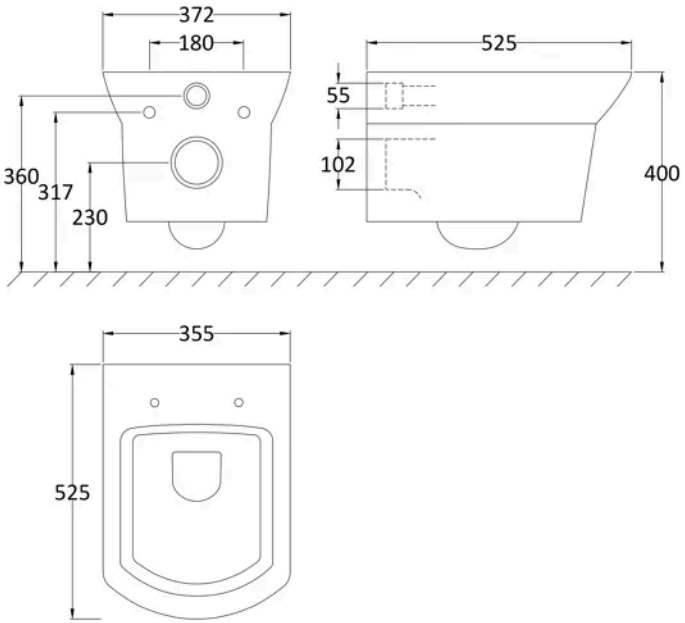

Product Dimensions

Product	400 x 372 x 525mm (H x W x D)
Packaged	410 x 370 x 550mm (H x W x D)
Nett Weight	23.7 kg
Packaged Weight	23.7 kg

Product Details

Country of Origin	Turkey
Product Material	Vitreous China
Colour/Finish	White
Style	Contemporary
Ce Certified	Yes
Includes Seat	No
Pan Type	Wall Hung

© ROXOR Group