Sales Code: LUL300 **Barcode:** 5056817725594 **Brand:** nuie Lux **Description:** nuie lux Lulworth Close Coupled Pan



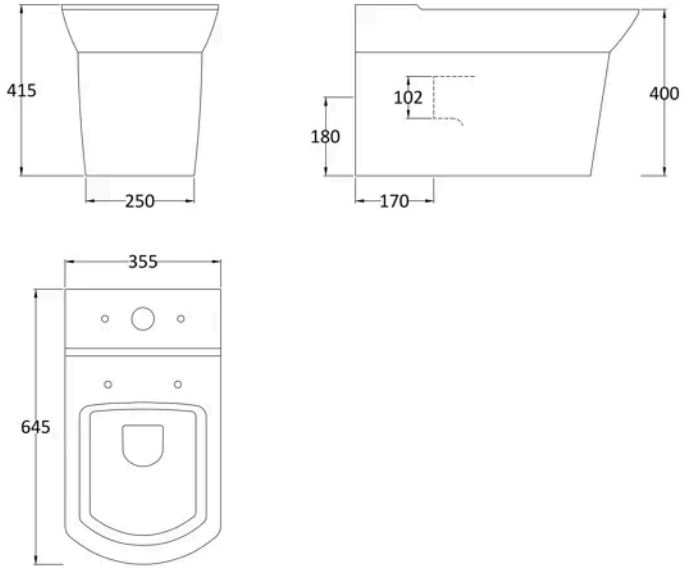

Product Dimensions

Product	415 x 355 x 645mm (H x W x D)
Packaged	430 x 380 x 700mm (H x W x D)
Nett Weight	35.2 kg
Packaged Weight	35.2 kg

Product Details

Country of Origin	Turkey
Product Material	Vitreous China
Colour/Finish	White
Style	Contemporary
Ce Certified	Yes
Includes Seat	No
Pan Type	Flush To Wall

© ROXOR Group