Sales Code: LUL005 **Barcode:** 5056817728472 **Brand:** nuie Lux **Description:** nuie lux Lulworth 1 Tap Hole 550mm Basin & Semi Pedestal



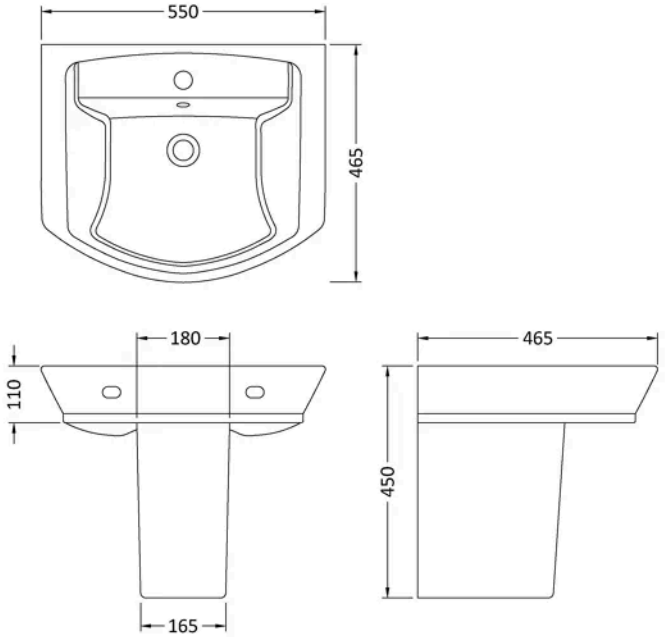

Product Dimensions

Product	450 x 550 x 465mm (H x W x D)
Packaged	550 x 550 x 550mm (H x W x D)
Nett Weight	22.4 kg
Packaged Weight	22.4 kg

Product Details

Country of Origin	Turkey
Product Material	Vitreous China
Colour/Finish	White
Mount Type	Wall Hung
Style	Contemporary
Ce Certified	Yes
Inner Bowl Height	110 mm
No. Of Tapholes	1
Number Of Bowls	1
Overflow Included	Yes
Tap Included	No
Waste Included	No

© ROXOR Group

Sales Code: LUL302 **Barcode:** 5056817725549 **Brand:** nuie Lux **Description:** nuie lux Lulworth 1 Tap Hole 550mm Ceramic Basin



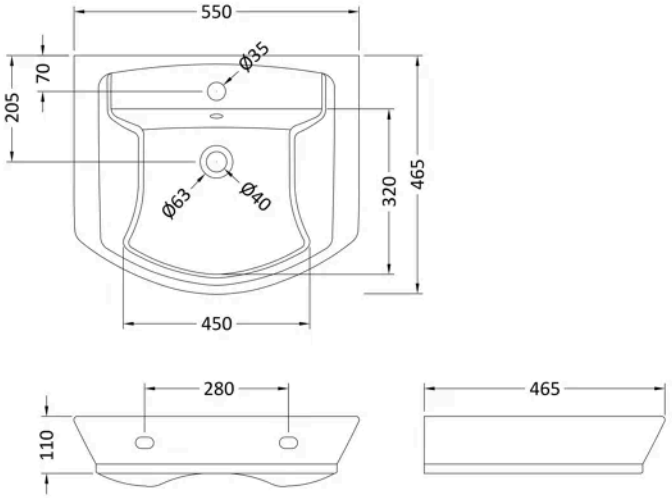

Product Dimensions

Packaged	580 x 480 x 190mm (H x W x D)
Nett Weight	15.4 kg
Packaged Weight	15.4 kg

Product Details

Country of Origin	Turkey
Product Material	Vitreous China
Colour/Finish	White
Ce Certified	Yes
Inner Bowl Height	110 mm
No. Of Tapholes	1
Number Of Bowls	1

© ROXOR Group

Sales Code: LUL607 **Barcode:** 5056817725587 **Brand:** nuie Lux **Description:** nuie lux Lulworth White Contemporary Semi Pedestal



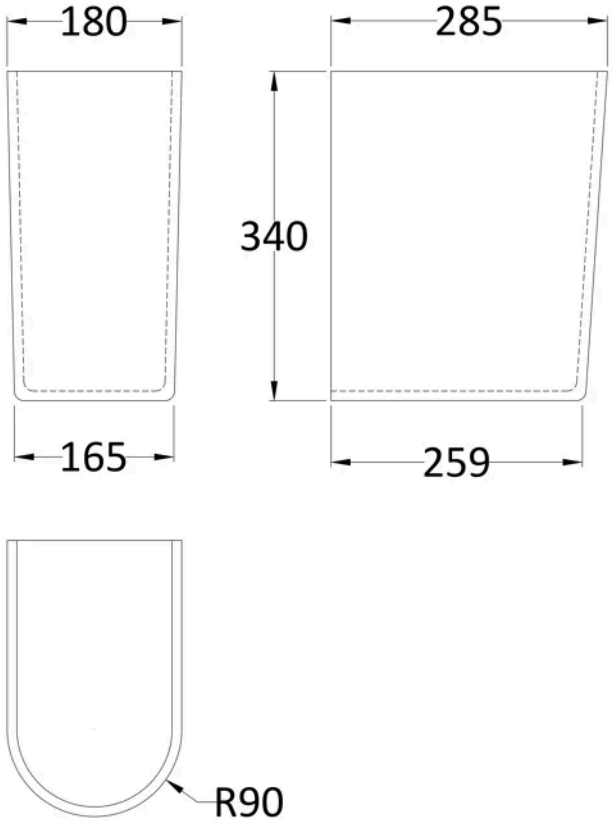

Product Dimensions

Packaged	335 x 320 x 222mm (H x W x D)
Nett Weight	7 kg
Packaged Weight	7 kg

Product Details

Country of Origin	Turkey
Colour/Finish	White
Ce Certified	Yes

© ROXOR Group