Sales Code: LUL004 **Barcode:** 5056817728465 **Brand:** nuie Lux **Description:** nuie lux Lulworth 1 Tap Hole 850mm Pedestal Basin



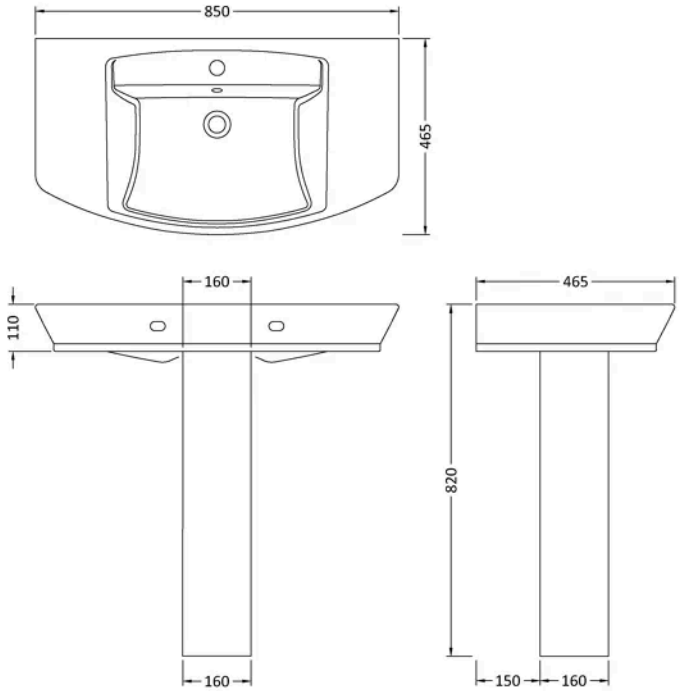

Product Dimensions

Product	820 x 850 x 465mm (H x W x D)
Packaged	550 x 550 x 550mm (H x W x D)
Nett Weight	33.3 kg
Packaged Weight	33.3 kg

Product Details

Country of Origin	Turkey
Product Material	Vitreous China
Colour/Finish	White
Mount Type	Floor
Style	Contemporary
Ce Certified	Yes
Inner Bowl Height	100 mm
No. Of Tapholes	1
Number Of Bowls	1
Overflow Included	Yes
Tap Included	No
Waste Included	No

© ROXOR Group

Sales Code: LUL342 **Barcode:** 5056817725563 **Brand:** nuie Lux **Description:** nuie lux Lulworth 1 Tap Hole 850mm Ceramic Basin



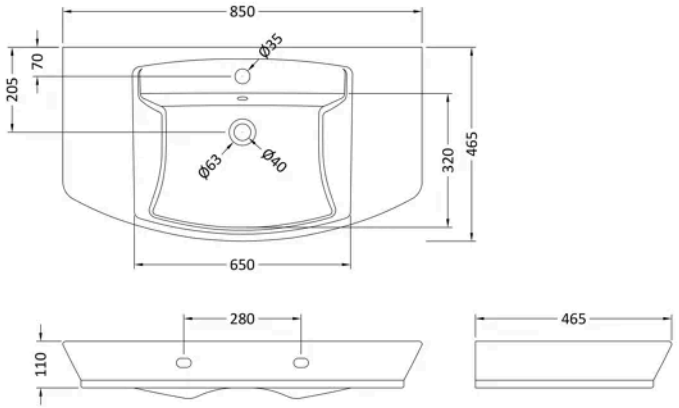

Product Dimensions

Packaged	910 x 190 x 510mm (H x W x D)
Nett Weight	23.3 kg
Packaged Weight	23.3 kg

Product Details

Country of Origin	Turkey
Product Material	Vitreous China
Colour/Finish	White
Ce Certified	Yes
Inner Bowl Height	100 mm
No. Of Tapholes	1
Number Of Bowls	1

© ROXOR Group

Sales Code: LUL603 **Barcode:** 5056817725570 **Brand:** nuie Lux **Description:** nuie lux Lulworth White Contemporary Full Pedestal



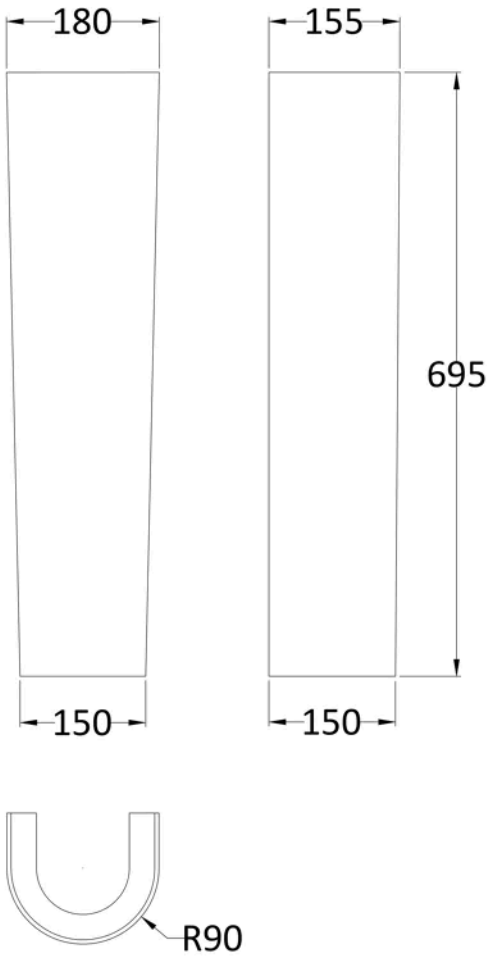

Product Dimensions

Packaged	670 x 205 x 205mm (H x W x D)
Nett Weight	10 kg
Packaged Weight	10 kg

Product Details

Country of Origin	Turkey
Colour/Finish	White
Ce Certified	Yes

© ROXOR Group