**Sales Code:** LUL003 **Barcode:** 5056817728458 **Brand:** nuie Lux **Description:** nuie lux Lulworth 1 Tap Hole 650mm Basin & Pedestal



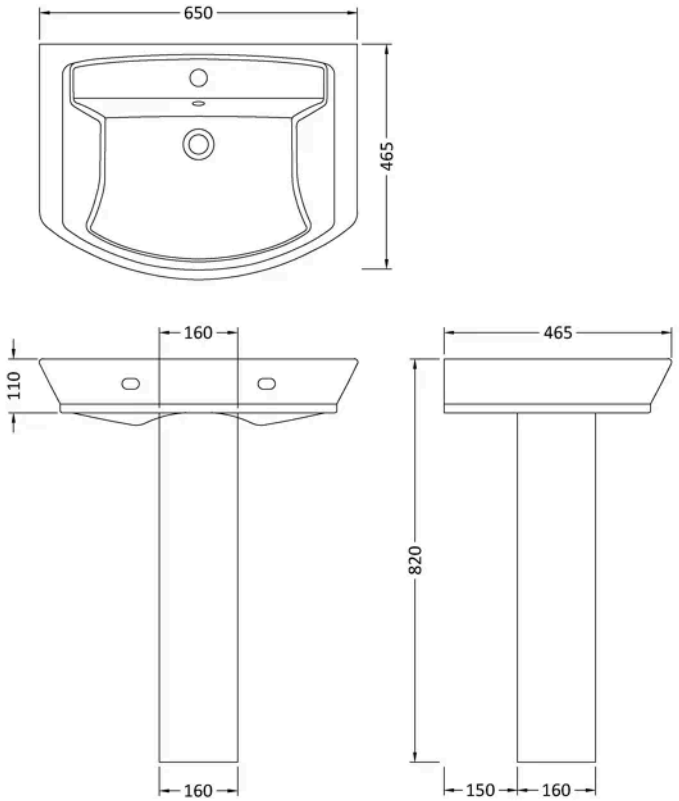


## Product Dimensions

| | |
|---|---|
| Product | 820 x 650 x 465mm (H x W x D) |
| Packaged | 550 x 550 x 550mm (H x W x D) |
| Nett Weight | 27.8 kg |
| Packaged Weight | 27.8 kg |

## Product Details

| | |
|---|---|
| Country of Origin | Turkey |
| Product Material | Vitreous China |
| Colour/Finish | White |
| Mount Type | Floor |
| Style | Contemporary |
| Fixings Included | No |
| Ce Certified | Yes |
| Inner Bowl Depth | 315 mm |
| Inner Bowl Height | 100 mm |
| Inner Bowl Width | 475 mm |
| No. Of Tapholes | 1 |
| Number Of Bowls | 1 |
| Overflow Cover Included | Yes |
| Overflow Included | Yes |
| Tap Included | No |
| Waste Included | No |

© ROXOR Group

**Sales Code:** LUL322 **Barcode:** 5056817725556 **Brand:** nuie Lux **Description:** nuie lux Lulworth 1 Tap Hole 650mm Ceramic Basin



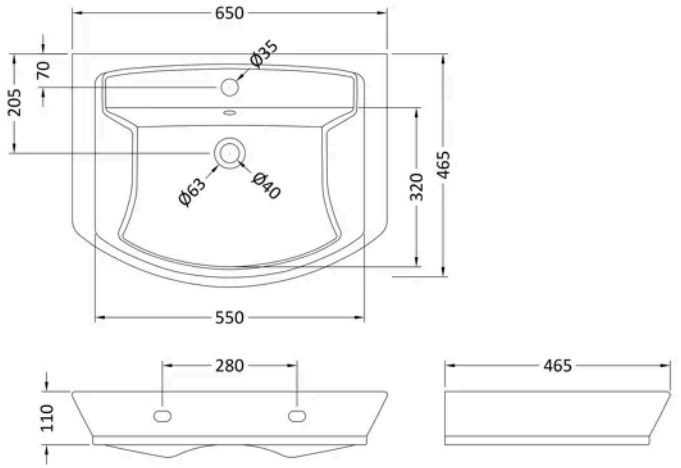


## Product Dimensions

| | |
|---|---|
| Packaged | 725 x 190 x 495mm (H x W x D) |
| Nett Weight | 17.8 kg |
| Packaged Weight | 17.8 kg |

## Product Details

| | |
|---|---|
| Country of Origin | Turkey |
| Product Material | Vitreous China |
| Colour/Finish | White |
| Ce Certified | Yes |
| Inner Bowl Height | 100 mm |
| No. Of Tapholes | 1 |
| Number Of Bowls | 1 |

© ROXOR Group

**Sales Code:** LUL603 **Barcode:** 5056817725570 **Brand:** nuie Lux **Description:** nuie lux Lulworth White Contemporary Full Pedestal



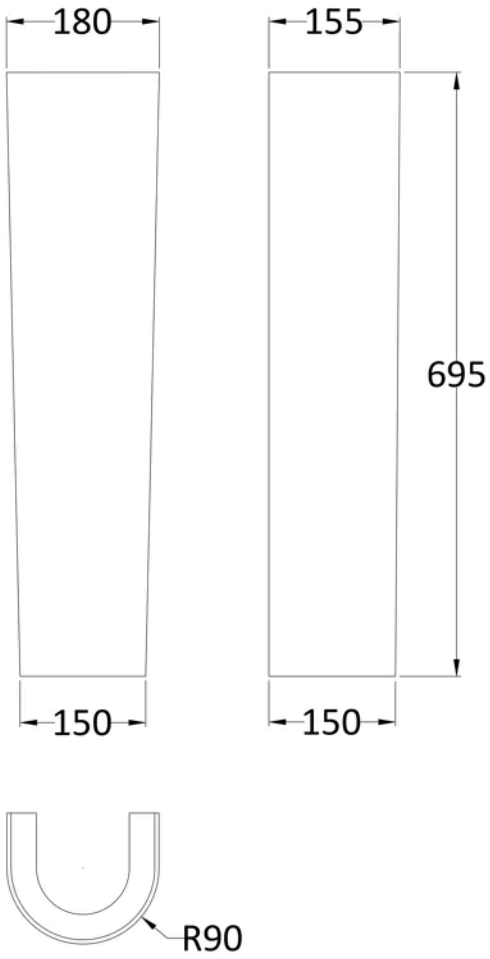


## Product Dimensions

| | |
|---|---|
| Packaged | 670 x 205 x 205mm (H x W x D) |
| Nett Weight | 10 kg |
| Packaged Weight | 10 kg |

## Product Details

| | |
|---|---|
| Country of Origin | Turkey |
| Colour/Finish | White |
| Ce Certified | Yes |

© ROXOR Group