Sales Code: LTW3094W2

Barcode: 5056817705077

Brand: nuie Lux

Description: nuie lux Loftwood Bleached Oak 1200mm 2 Drawer Wall Hung Vanity Unit With Co-ordinating Worktop



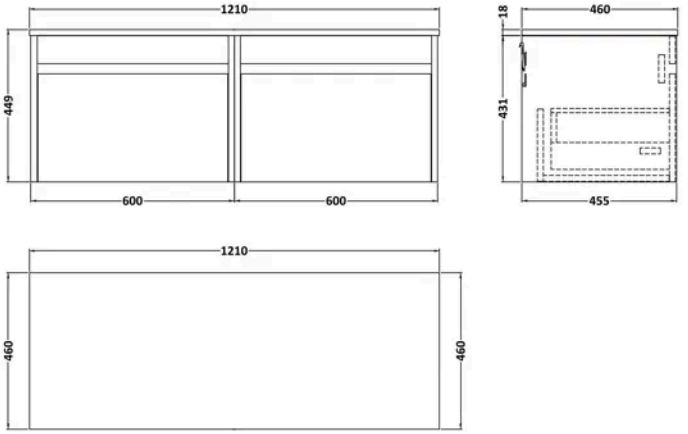

Product Dimensions

Product	449 x 1210 x 460mm (H x W x D)
Packaged	470 x 1220 x 475mm (H x W x D)
Nett Weight	38.7 kg
Packaged Weight	38.7 kg

Product Details

Country of Origin	United Kingdom
Product Material	Mfc Textured Woodgrain
Colour/Finish	Bleached Oak
Mount Type	Wall Hung
Style	Contemporary
Fixings Included	Yes
Construction Method	Cam & Wood Dowel
Construction Type	Rigid
Drawer Type	80mm High Metal S/C Inc Gallery
Fascia Finish	Mdf Vinyl Textured Woodgrain
Fsc Certified	Yes
Handles Included	No
Material Thickness	18 mm
No. Drawers	1

© ROXOR Group

Sales Code: BCWT301260 **Barcode:** 5056678477427 **Brand:** BC Designs **Description:** 1200 Worktop (1205x460x18mm)



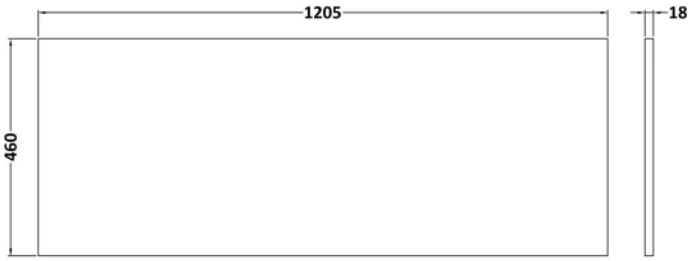

Product Dimensions

Product	18 x 1205 x 460mm (H x W x D)
Packaged	20 x 1205 x 465mm (H x W x D)
Nett Weight	5.2 kg
Packaged Weight	5.7 kg

Packaging Details

Box Qty	1
Label Size (mm)	50 x 100
Label Colour	White
Label Qty	1.0000

Product Details

Country of Origin	United Kingdom
Product Material	Mfc Textured Woodgrain
Colour/Finish	Bleached Oak
Style	Contemporary
Fixings Included	Yes
Fsc Certified	Yes
Material Thickness	18 mm

© ROXOR Group

Sales Code: LFT3094 **Barcode:** 5056678477519 **Brand:** nuie Lux **Description:** nuie lux Loftwood 600mm Bleached Oak 1 Drawer Wall Hung Vanity Unit



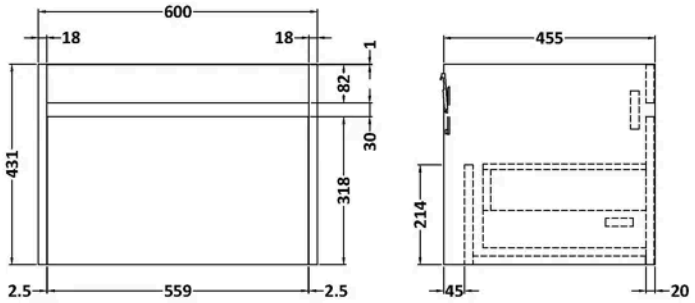

Product Dimensions

Product	359 x 455 x 600mm (H x W x D)
Packaged	470 x 620 x 475mm (H x W x D)
Nett Weight	16 kg
Packaged Weight	16.5 kg

Packaging Details

Box Qty	1

Product Details

Country of Origin	United Kingdom
Product Material	Mfc Textured Woodgrain
Colour/Finish	Bleached Oak
Mount Type	Wall Hung
Style	Contemporary
Fixings Included	Yes
Construction Method	Cam & Wood Dowel
Construction Type	Rigid
Drawer Type	80mm High Metal S/C Inc Gallery
Fascia Finish	Mdf Vinyl Textured Woodgrain
Fsc Certified	Yes
Handles Included	No
Material Thickness	18 mm
No. Drawers	1

© ROXOR Group