Sales Code: LTW2696WS1

Barcode: 5056817705251

Brand: nuie Lux

Description: nuie lux Loftwood Metallic Slate 800mm 1 Drawer Wall Hung Vanity Unit With Basin With Marble Worktop



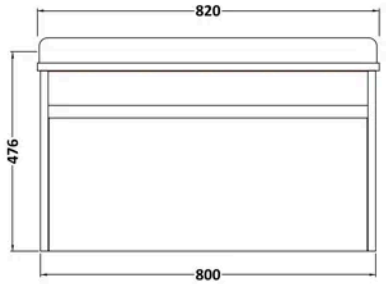

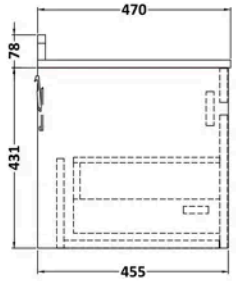

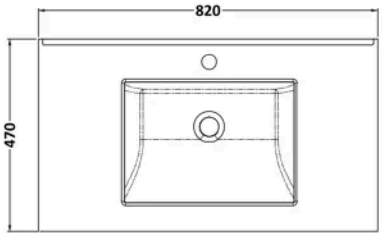

Product Dimensions

Product	509 x 820 x 470mm (H x W x D)
Packaged	470 x 820 x 475mm (H x W x D)
Nett Weight	40.5 kg
Packaged Weight	40.5 kg

Product Details

Country of Origin	United Kingdom
Product Material	Mfc Textured Matt,Natural Marble,Vitreous China
Colour/Finish	Metallic Slate
Mount Type	Wall Hung
Style	Contemporary
Fixings Included	Yes
Construction Method	Cam & Wood Dowel
Construction Type	Rigid
Drawer Type	80mm High Metal S/C Inc Gallery
Fascia Finish	Mdf Vinyl Textured Matt
Fsc Certified	Yes
Handles Included	No
Inner Bowl Height	160 mm
Material Thickness	18 mm
No. Drawers	1
No. Of Tapholes	1
Number Of Bowls	1
Overflow Cover Included	Yes
Overflow Included	Yes
Tap Included	No
Waste Included	No

© ROXOR Group

Sales Code: LFT2696 **Barcode:** 5056678470992 **Brand:** BC Designs **Description:** nuie lux Loftwood 800mm Metallic Slate Wall Hung Vanity Unit



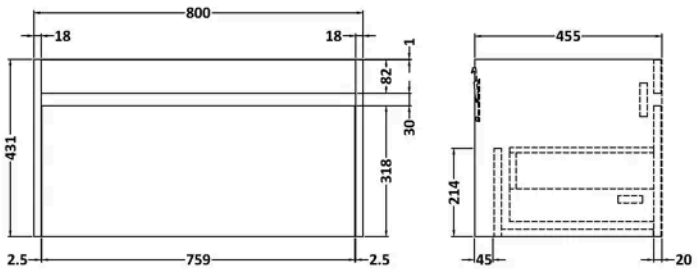

Product Dimensions

Product	359 x 455 x 800mm (H x W x D)
Packaged	470 x 820 x 475mm (H x W x D)
Nett Weight	19 kg
Packaged Weight	19.5 kg

Product Details

Country of Origin	United Kingdom
Product Material	Mfc Textured Matt
Colour/Finish	Metallic Slate
Mount Type	Wall Hung
Style	Contemporary
Fixings Included	Yes
Construction Method	Cam & Wood Dowel
Construction Type	Rigid
Drawer Type	80mm High Metal S/C Inc Gallery
Fascia Finish	Mdf Vinyl Textured Matt
Fsc Certified	Yes
Handles Included	No
Material Thickness	18 mm
No. Drawers	1

© ROXOR Group

Sales Code: MFB228 **Barcode:** 5056678471227 **Brand:** BC Designs **Description:** BC Designs 800mm 1 Tap Hole White Single Square Bowl Marble Worktop Basin



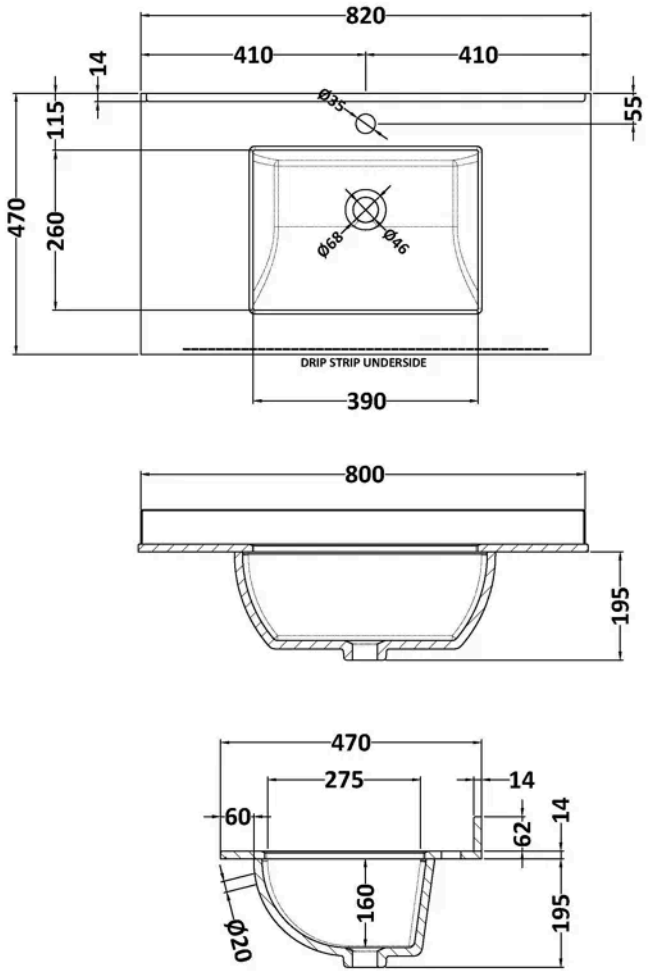

Product Dimensions

Product	209 x 820 x 463mm (H x W x D)
Packaged	250 x 900 x 580mm (H x W x D)
Nett Weight	20.5 kg
Packaged Weight	21 kg

Packaging Details

Box Qty	1
Label Size (mm)	50 x 100
Label Colour	White
Label Qty	2.0000

Product Details

Country of Origin	China
Product Material	Vitreous China
Colour/Finish	White
Style	Traditional
Bottle Trap Included	No
Ce Certified	Yes
Inner Bowl Depth	275 mm
Inner Bowl Height	160 mm
Inner Bowl Width	390 mm
No. Of Tapholes	1
Number Of Bowls	1
Overflow Cover Included	No
Overflow Included	Yes
Tap Included	No
Waste Included	No

© ROXOR Group