Sales Code: LTW2696H

Barcode: 5056817705213

Brand: nuie Lux

Description: nuie lux Loftwood Metallic Slate 800mm 1 Drawer Wall Hung Vanity Unit With Fireclay Basin



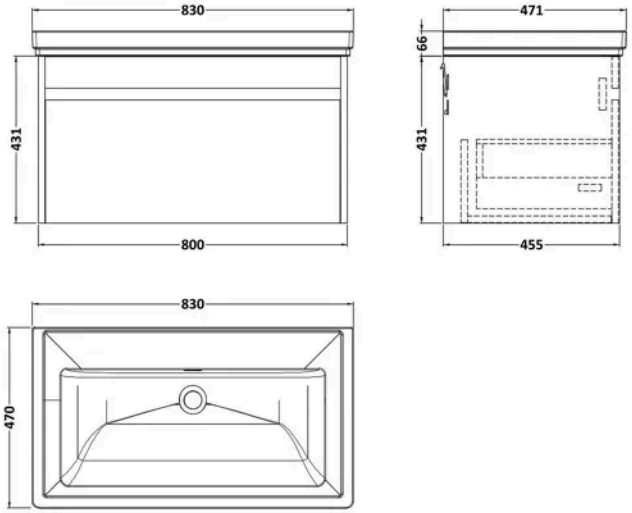

Product Dimensions

Product	497 x 830 x 471mm (H x W x D)
Packaged	470 x 820 x 475mm (H x W x D)
Nett Weight	42 kg
Packaged Weight	42 kg

Product Details

Country of Origin	United Kingdom
Product Material	Fireclay,Mfc Textured Woodgrain
Colour/Finish	Metallic Slate
Mount Type	Wall Hung
Style	Contemporary
Fixings Included	Yes
Construction Method	Cam & Wood Dowel
Construction Type	Rigid
Drawer Type	80mm High Metal S/C Inc Gallery
Fascia Finish	Mdf Vinyl Textured Matt
Fsc Certified	Yes
Handles Included	No
Inner Bowl Height	134 mm
Material Thickness	18 mm
No. Drawers	1
No. Of Tapholes	No Tapholes
Number Of Bowls	1
Overflow Cover Included	Yes
Overflow Included	Yes
Tap Included	No
Waste Included	No

© ROXOR Group

Sales Code: FFB515 **Barcode:** 5056678471203 **Brand:** BC Designs **Description:** BC Designs 800mm 0 Tap Hole Traditional Fireclay Basin



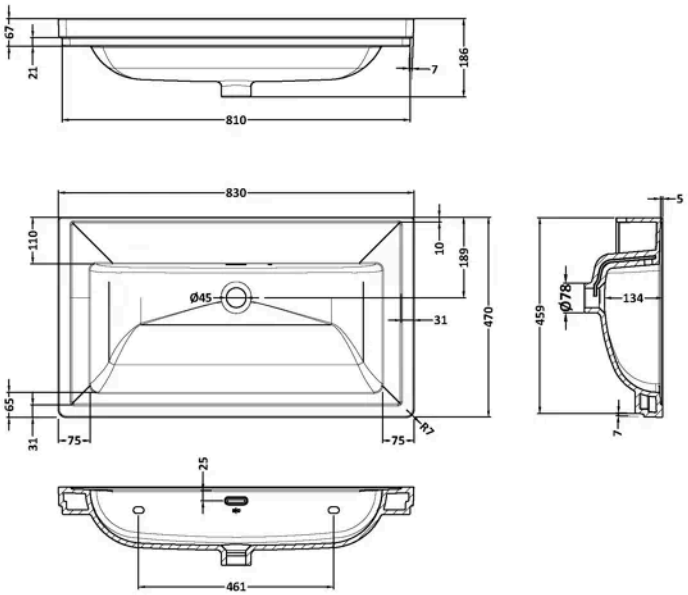

Product Dimensions

Product	186 x 830 x 470mm (H x W x D)
Packaged	492 x 860 x 205mm (H x W x D)
Nett Weight	22.2 kg
Packaged Weight	22.5 kg

Packaging Details

Box Qty	1

Product Details

Country of Origin	United Arab Emirates
Product Material	Fireclay
Colour/Finish	White
Style	Contemporary
Ce Certified	Yes
Inner Bowl Height	134 mm
No. Of Tapholes	No Tapholes
Number Of Bowls	1
Overflow Included	Yes
Tap Included	No
Waste Included	No

© ROXOR Group

Sales Code: LFT2696 **Barcode:** 5056678470992 **Brand:** BC Designs **Description:** nuie lux Loftwood 800mm Metallic Slate Wall Hung Vanity Unit



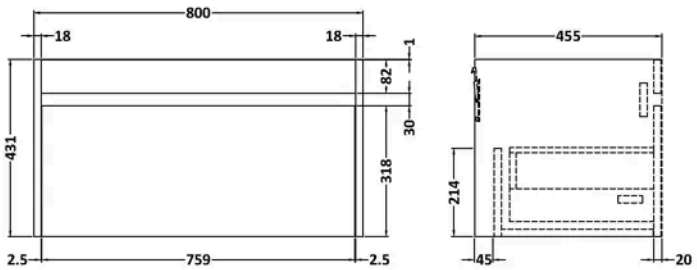

Product Dimensions

Product	359 x 455 x 800mm (H x W x D)
Packaged	470 x 820 x 475mm (H x W x D)
Nett Weight	19 kg
Packaged Weight	19.5 kg

Product Details

Country of Origin	United Kingdom
Product Material	Mfc Textured Matt
Colour/Finish	Metallic Slate
Mount Type	Wall Hung
Style	Contemporary
Fixings Included	Yes
Construction Method	Cam & Wood Dowel
Construction Type	Rigid
Drawer Type	80mm High Metal S/C Inc Gallery
Fascia Finish	Mdf Vinyl Textured Matt
Fsc Certified	Yes
Handles Included	No
Material Thickness	18 mm
No. Drawers	1

© ROXOR Group