Sales Code: LTW2294K

Barcode: 5056817704612

Brand: nuie Lux

Description: nuie lux Loftwood Graphite Grey Woodgrain 600mm 1 Drawer Wall Hung Vanity Unit With Fireclay Basin



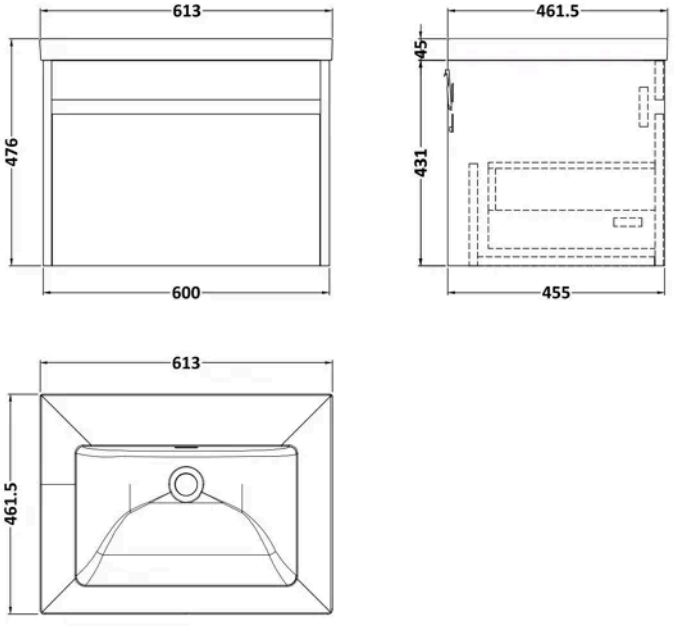

Product Dimensions

Product	476 x 613 x 462mm (H x W x D)
Packaged	470 x 620 x 475mm (H x W x D)
Nett Weight	33.5 kg
Packaged Weight	33.5 kg

Product Details

Country of Origin	United Kingdom
Product Material	Fireclay,Mfc Textured Woodgrain
Colour/Finish	Graphite Grey Woodgrain
Mount Type	Wall Hung
Style	Contemporary
Fixings Included	Yes
Construction Method	Cam & Wood Dowel
Construction Type	Rigid
Drawer Type	80mm High Metal S/C Inc Gallery
Fascia Finish	Mdf Vinyl Textured Woodgrain
Fsc Certified	Yes
Handles Included	No
Inner Bowl Height	135 mm
Material Thickness	18 mm
No. Drawers	1
No. Of Tapholes	No Tapholes
Number Of Bowls	1
Overflow Cover Included	Yes
Overflow Included	Yes
Tap Included	No
Waste Included	No

© ROXOR Group

Sales Code: FFB613 **Barcode:** 5056678477373 **Brand:** BC Designs **Description:** BC Designs 600mm 0 Tap Hole Contemporary Fireclay Basin



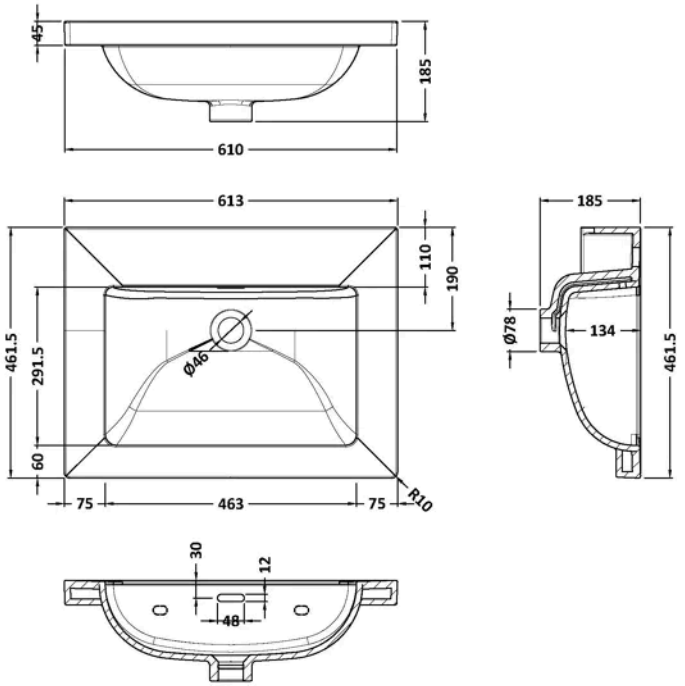

Product Dimensions

Product	45 x 610 x 460mm (H x W x D)
Packaged	490 x 650 x 220mm (H x W x D)
Nett Weight	17 kg
Packaged Weight	17 kg

Packaging Details

Box Qty	1
Label Size (mm)	100 x 50
Label Colour	White
Label Qty	2.0000

Product Details

Country of Origin	United Arab Emirates
Product Material	Fireclay
Colour/Finish	White
Style	Contemporary
Bottle Trap Included	No
Ce Certified	Yes
Inner Bowl Depth	300 mm
Inner Bowl Height	135 mm
Inner Bowl Width	480 mm
No. Of Tapholes	No Tapholes
Number Of Bowls	1
Overflow Cover Included	No
Overflow Included	Yes
Tap Included	No
Waste Included	No

© ROXOR Group

Sales Code: LFT2294 **Barcode:** 5056678470954 **Brand:** nuie Lux **Description:** nuie lux Loftwood 600mm Graphite Grey Woodgrain Wall Hung Vanity Unit



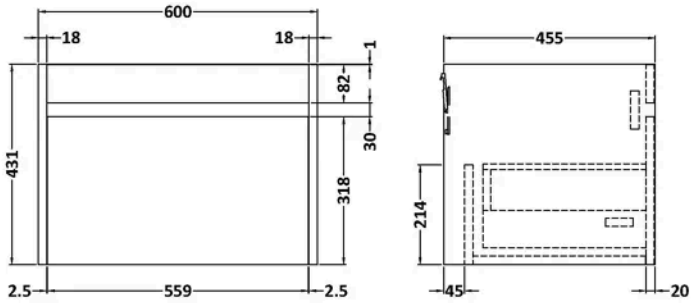

Product Dimensions

Product	359 x 455 x 600mm (H x W x D)
Packaged	470 x 620 x 475mm (H x W x D)
Nett Weight	16 kg
Packaged Weight	16.5 kg

Packaging Details

Box Qty	1

Product Details

Country of Origin	United Kingdom
Product Material	Mfc Textured Woodgrain
Colour/Finish	Graphite Grey Woodgrain
Mount Type	Wall Hung
Style	Contemporary
Fixings Included	Yes
Construction Method	Cam & Wood Dowel
Construction Type	Rigid
Drawer Type	80mm High Metal S/C Inc Gallery
Fascia Finish	Mdf Vinyl Textured Woodgrain
Fsc Certified	Yes
Handles Included	No
Material Thickness	18 mm
No. Drawers	1

© ROXOR Group