Sales Code: LTW1894CMT

Barcode: 5056817704919

Brand: nuie Lux

Description: nuie lux Loftwood Autumn Oak 600mm 1 Drawer Wall Hung Vanity Unit With Carrara Marble Worktop



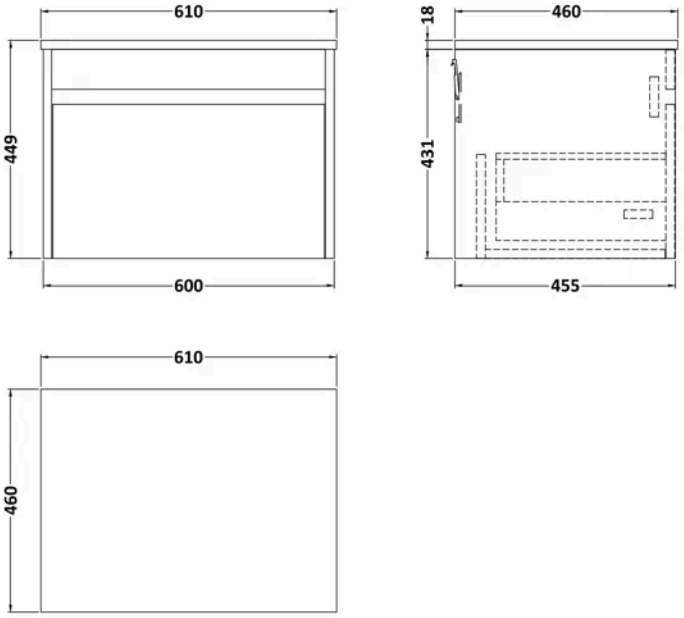

Product Dimensions

Product	449 x 610 x 460mm (H x W x D)
Packaged	470 x 620 x 475mm (H x W x D)
Nett Weight	30.5 kg
Packaged Weight	30.5 kg

Product Details

Country of Origin	United Kingdom
Product Material	Mfc Textured Woodgrain,Natural Marble
Colour/Finish	Autumn Oak
Mount Type	Wall Hung
Style	Contemporary
Fixings Included	Yes
Construction Method	Cam & Wood Dowel
Construction Type	Rigid
Drawer Type	80mm High Metal S/C Inc Gallery
Fascia Finish	Mdf Vinyl Textured Woodgrain
Fsc Certified	Yes
Handles Included	No
Material Thickness	18 mm
No. Drawers	1

© ROXOR Group

Sales Code: LFT1894 **Barcode:** 5056678470978 **Brand:** nuie Lux **Description:** nuie lux Loftwood 600mm Autumn 1 Drawer Oak Wall Hung Vanity Unit



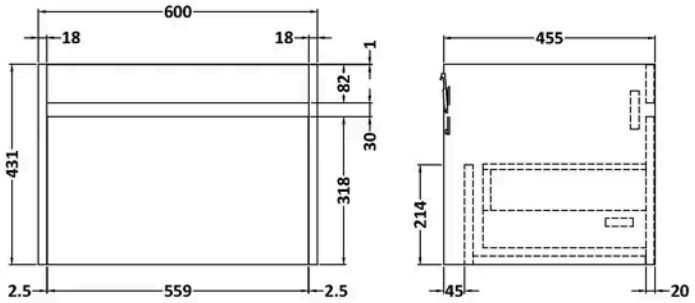

Product Dimensions

Product	359 x 455 x 600mm (H x W x D)
Packaged	470 x 620 x 475mm (H x W x D)
Nett Weight	16 kg
Packaged Weight	16.5 kg

Packaging Details

Box Qty	1

Product Details

Country of Origin	United Kingdom
Product Material	Mfc Textured Woodgrain
Colour/Finish	Autumn Oak
Mount Type	Wall Hung
Style	Contemporary
Fixings Included	Yes
Construction Method	Cam & Wood Dowel
Construction Type	Rigid
Drawer Type	80mm High Metal S/C Inc Gallery
Fascia Finish	Mdf Vinyl Textured Woodgrain
Fsc Certified	Yes
Handles Included	No
Material Thickness	18 mm
No. Drawers	1

© ROXOR Group

Sales Code: MFBT96046 **Barcode:** 5056678473696 **Brand:** BC Designs **Description:** BC Designs 610 x 460mm Carrera Marble Top



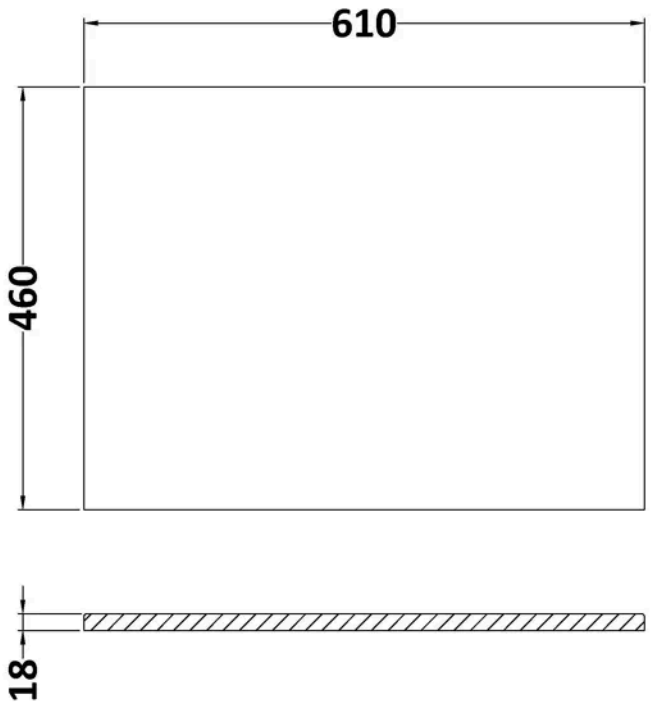

Product Dimensions

Product	18 x 610 x 460mm (H x W x D)
Packaged	35 x 650 x 500mm (H x W x D)
Nett Weight	13.5 kg
Packaged Weight	14 kg

Packaging Details

Box Qty	1
Label Size (mm)	50 x 100
Label Colour	White
Label Qty	1.0000

Product Details

Country of Origin	China
Product Material	Natural Marble
Colour/Finish	Carrera Marble
Style	Contemporary
Fixings Included	No
Fsc Certified	Yes
Material Thickness	18 mm

© ROXOR Group