Sales Code: LSL1826Q **Barcode:** 5056883752296 **Brand:** nuie Lux **Description:** nuie lux Kivo Autumn Oak 800mm Wall Hung 2-Drawer Unit & Stone Basin 1TH



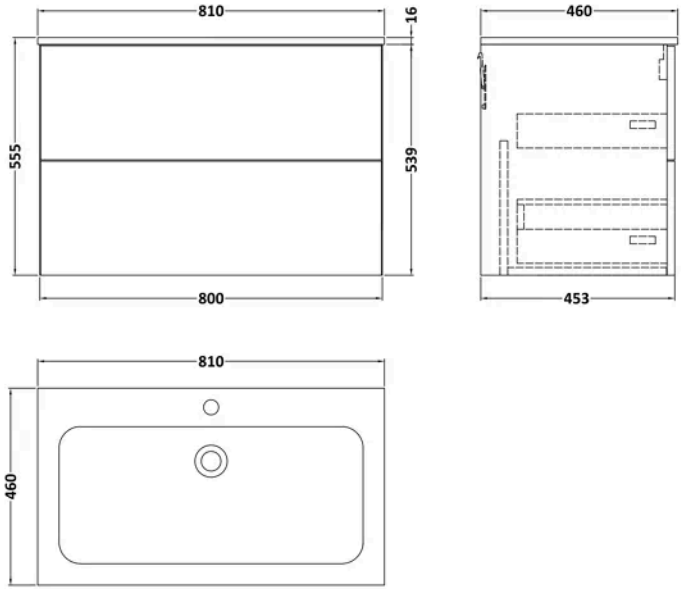

Product Dimensions

Product	555 x 810 x 460mm (H x W x D)
Packaged	605 x 805 x 460mm (H x W x D)
Nett Weight	40.5 kg
Packaged Weight	40.5 kg

Product Details

Country of Origin	United Kingdom
Product Material	Mfc Textured Woodgrain,Stone
Colour/Finish	Autumn Oak
Mount Type	Wall Hung
Style	Contemporary
Construction Method	Cam & Wood Dowel
Construction Type	Rigid
Fascia Finish	Mdf Vinyl Textured Woodgrain
Handles Included	Yes
Inner Bowl Height	128 mm
Leg Set Included	No
Material Thickness	18 mm
No. Drawers	2
No. Of Tapholes	1
Number Of Bowls	1
Overflow Cover Included	Yes
Overflow Included	Yes
Tap Included	No
Waste Included	No
Waste Shroud	No

© ROXOR Group

Sales Code: LSL1826 **Barcode:** 5056817711368 **Brand:** nuie Lux **Description:** nuie lux Kivo Autumn Oak 800mm 2 Drawer Wall Hung Vanity Unit



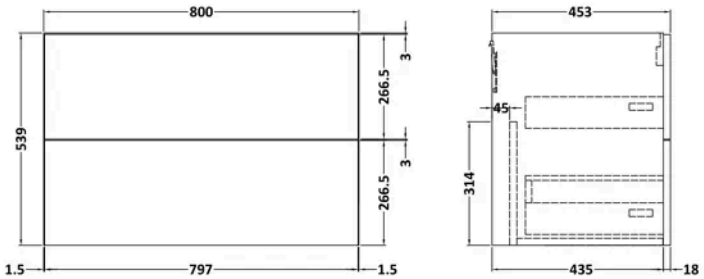

Product Dimensions

Product	539 x 800 x 455mm (H x W x D)
Packaged	560 x 820 x 405mm (H x W x D)
Nett Weight	23.5 kg
Packaged Weight	24 kg

Packaging Details

Box Qty	1

Product Details

Country of Origin	United Kingdom
Product Material	Mfc Textured Woodgrain
Colour/Finish	Autumn Oak
Mount Type	Wall Hung
Style	Contemporary
Construction Method	Cam & Wood Dowel
Construction Type	Rigid
Drawer Type	80mm High Metal S/C Inc Gallery
Fascia Finish	Mdf Vinyl Textured Woodgrain
Handles Included	No
Material Thickness	18 mm
No. Drawers	2
Waste Shroud	Yes

© ROXOR Group

Sales Code: LXSB905 **Barcode:** 5056883750483 **Brand:** nuie Lux **Description:** 810 x 460mm Basin 1T/H



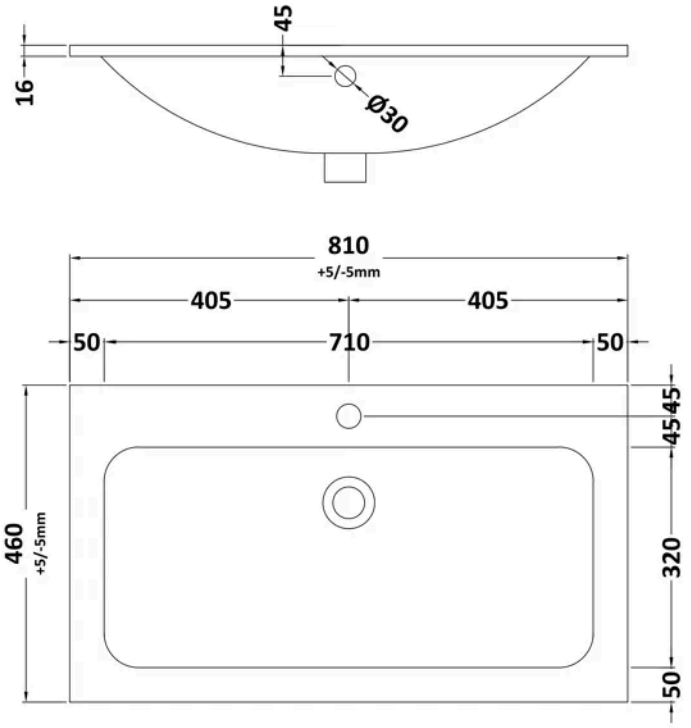

Product Dimensions

Product	810 x 460mm (W x D)
Packaged	200 x 875 x 530mm (H x W x D)
Nett Weight	16 kg
Packaged Weight	16.5 kg

Packaging Details

Box Qty	1

Product Details

Country of Origin	China
Product Material	Stone
Colour/Finish	Carrera Marble
Style	Contemporary
Bottle Trap Included	No
Ce Certified	Yes
Inner Bowl Depth	320 mm
Inner Bowl Height	128 mm
Inner Bowl Width	710 mm
No. Of Tapholes	1
Number Of Bowls	1
Overflow Cover Included	Yes
Overflow Included	Yes
Tap Included	No
Waste Included	No

© ROXOR Group