Sales Code: LSL1803LWN

Barcode: 5056817783846

Brand: nuie Lux

Description: nuie lux Kivo 600mm Autumn Oak 2 Door Floor Standing Vanity Unit With White Matt Nebula Worktop



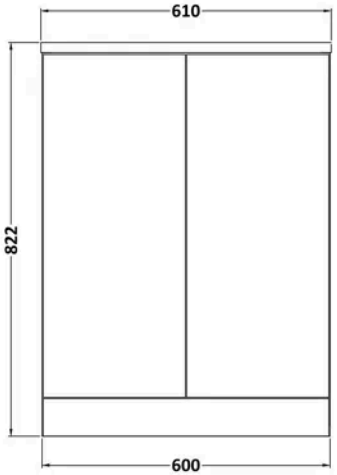

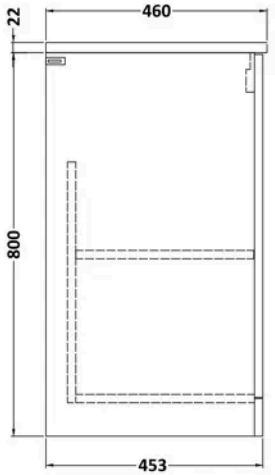

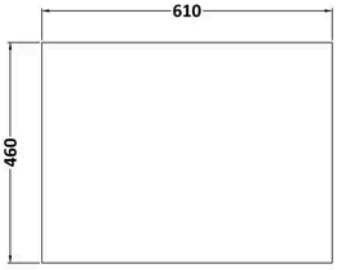

Product Dimensions

Product	818 x 605 x 460mm (H x W x D)
Packaged	818 x 605 x 460mm (H x W x D)
Nett Weight	22 kg
Packaged Weight	22 kg

Product Details

Country of Origin	United Kingdom
Product Material	Mfc Laminated,Mfc Textured Woodgrain
Colour/Finish	Autumn Oak
Mount Type	Floor
Style	Contemporary
Construction Method	Cam & Wood Dowel
Construction Type	Rigid
Fascia Finish	Mdf Vinyl Textured Woodgrain
Handles Included	No
Material Thickness	18 mm
No. Doors	2
No. Shelves	1
Number Of Shelves	1
Waste Shroud	No

© ROXOR Group

Sales Code: LSL1803 **Barcode:** 5056817711320 **Brand:** nuie Lux **Description:** nuie lux Kivo 600mm Autumn Oak 2 Door Floor Standing Vanity Unit



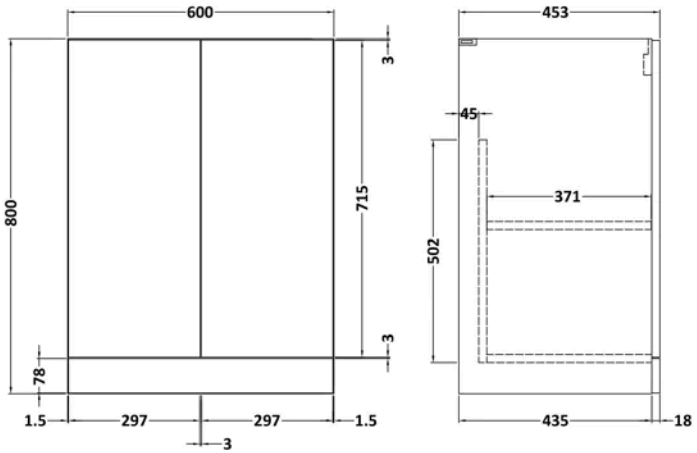

Product Dimensions

Product	800 x 600 x 455mm (H x W x D)
Packaged	820 x 620 x 405mm (H x W x D)
Nett Weight	19.5 kg
Packaged Weight	20 kg

Packaging Details

Box Qty	1

Product Details

Country of Origin	United Kingdom
Product Material	Mfc Textured Woodgrain
Colour/Finish	Autumn Oak
Mount Type	Floor
Style	Contemporary
Construction Method	Cam & Wood Dowel
Construction Type	Rigid
Fascia Finish	Mdf Vinyl Textured Woodgrain
Handles Included	No
Material Thickness	18 mm
No. Doors	2
No. Shelves	1
Number Of Shelves	1
Waste Shroud	No

© ROXOR Group

Sales Code: LX6046WN **Barcode:** 5056817726188 **Brand:** nuie Lux **Description:** nuie lux 605 x 460mm Laminate White Matt Nebula Worktop

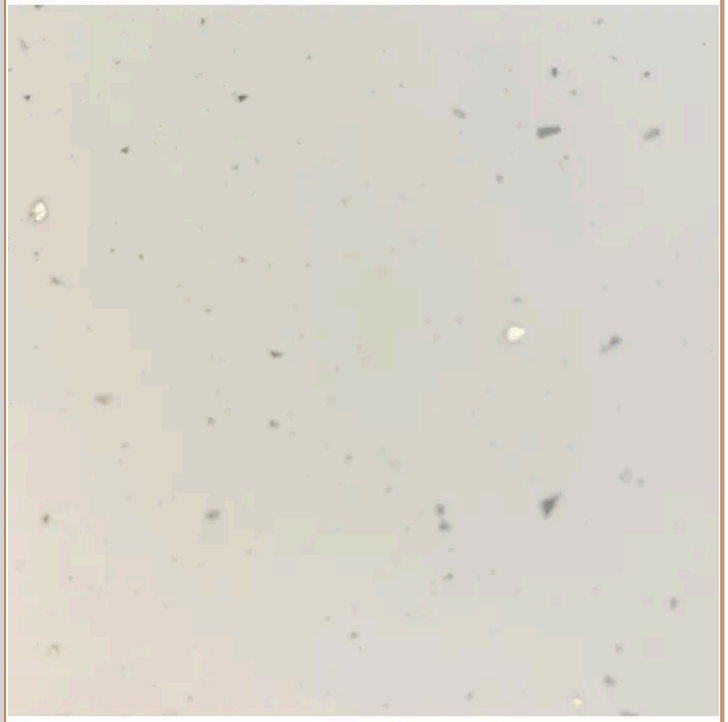

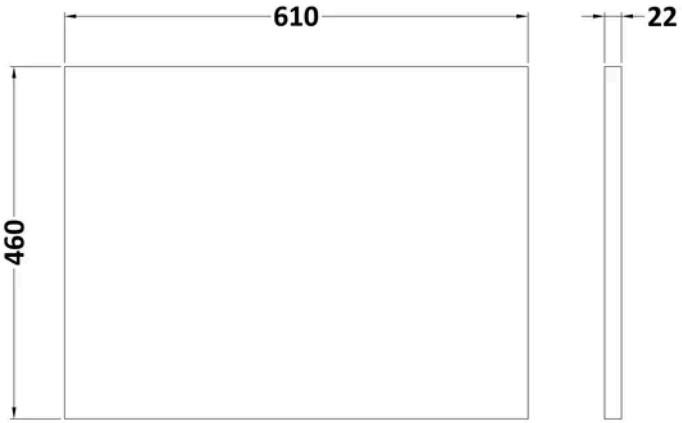

Product Dimensions

Product	22 x 605 x 460mm (H x W x D)
Packaged	20 x 520 x 610mm (H x W x D)
Nett Weight	2 kg
Packaged Weight	2 kg

Packaging Details

Box Qty	1

Product Details

Country of Origin	United Kingdom
Product Material	Mfc Laminated
Colour/Finish	White Matt Nebula
Style	Contemporary

© ROXOR Group