**Sales Code:** LSL1424WS1

**Barcode:** 5056817787332

**Brand:** nuie Lux

**Description:** nuie lux Kivo 600mm Soft Black 2 Drawer Wall Hung Vanity Unit With 1 Tap Hole Marble Worktop



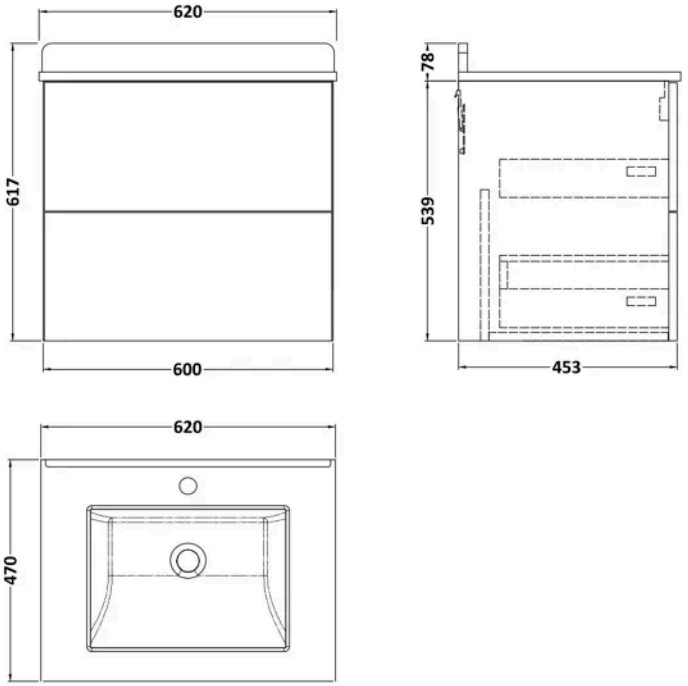


## Product Dimensions

| | |
|---|---|
| Product | 553 x 605 x 460mm (H x W x D) |
| Packaged | 553 x 605 x 460mm (H x W x D) |
| Nett Weight | 39 kg |
| Packaged Weight | 39 kg |

## Product Details

| | |
|---|---|
| Country of Origin | United Kingdom |
| Product Material | Mfc Smooth Matt,Vitreous China |
| Colour/Finish | Soft Black |
| Mount Type | Wall Hung |
| Style | Contemporary |
| Construction Method | Cam & Wood Dowel |
| Construction Type | Rigid |
| Drawer Type | 80mm High Metal S/C Inc Gallery |
| Fascia Finish | Mdf Vinyl Smooth Matt |
| Handles Included | No |
| Inner Bowl Height | 160 mm |
| Material Thickness | 18 mm |
| No. Drawers | 2 |
| No. Of Tapholes | 1 |
| Number Of Bowls | 1 |
| Tap Included | No |
| Waste Included | No |
| Waste Shroud | Yes |

© ROXOR Group

**Sales Code:** LSL1424 **Barcode:** 5056817711269 **Brand:** nuie Lux **Description:** nuie lux Kivo 600mm Soft Black 2 Drawer Wall Hung Vanity Unit



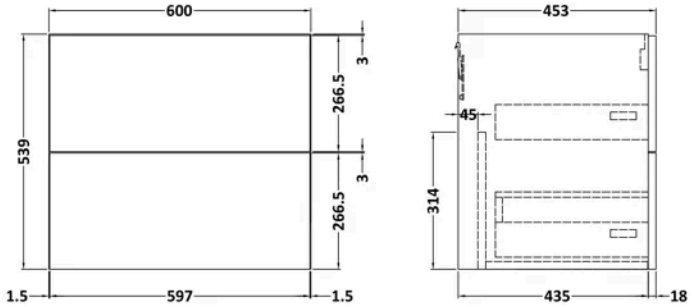


## Product Dimensions

| | |
|---|---|
| Product | 539 x 600 x 455mm (H x W x D) |
| Packaged | 560 x 620 x 405mm (H x W x D) |
| Nett Weight | 21.5 kg |
| Packaged Weight | 22 kg |

## Product Details

| | |
|---|---|
| Country of Origin | United Kingdom |
| Product Material | Mfc Smooth Matt |
| Colour/Finish | Soft Black |
| Mount Type | Wall Hung |
| Style | Contemporary |
| Construction Method | Cam & Wood Dowel |
| Construction Type | Rigid |
| Drawer Type | 80mm High Metal S/C Inc Gallery |
| Fascia Finish | Mdf Vinyl Smooth Matt |
| Handles Included | No |
| Material Thickness | 18 mm |
| No. Drawers | 2 |
| Waste Shroud | Yes |

© ROXOR Group

**Sales Code:** LXMB222 **Barcode:** 5056817728199 **Brand:** nuie Lux **Description:** nuie lux 1 Tap Hole 600mm White Single Square Bowl Marble Worktop Basin



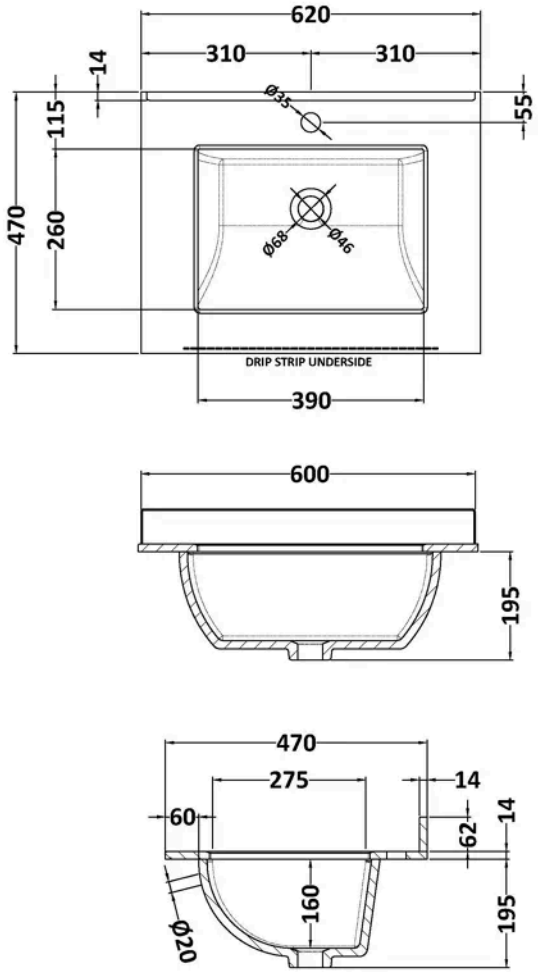


## Product Dimensions

| | |
|---|---|
| Product | 209 x 620 x 470mm (H x W x D) |
| Packaged | 250 x 700 x 580mm (H x W x D) |
| Nett Weight | 16.5 kg |
| Packaged Weight | 17 kg |

## Packaging Details

| | |
|---|---|
| Label Size (mm) | 50 x 100 |
| Label Colour | White |
| Label Qty | 2.0000 |

## Product Details

| | |
|---|---|
| Country of Origin | China |
| Product Material | Vitreous China |
| Colour/Finish | White |
| Style | Traditional |
| Bottle Trap Included | No |
| Ce Certified | Yes |
| Inner Bowl Depth | 275 mm |
| Inner Bowl Height | 160 mm |
| Inner Bowl Width | 390 mm |
| No. Of Tapholes | 1 |
| Number Of Bowls | 1 |
| Overflow Cover Included | No |
| Overflow Included | Yes |
| Tap Included | No |
| Waste Included | No |

© ROXOR Group