Sales Code: LSL1422Q **Barcode:** 5056883751831 **Brand:** nuie Lux **Description:** nuie lux Kivo Soft Black 600mm Wall Hung 1-Drawer Unit & Stone Basin 1TH



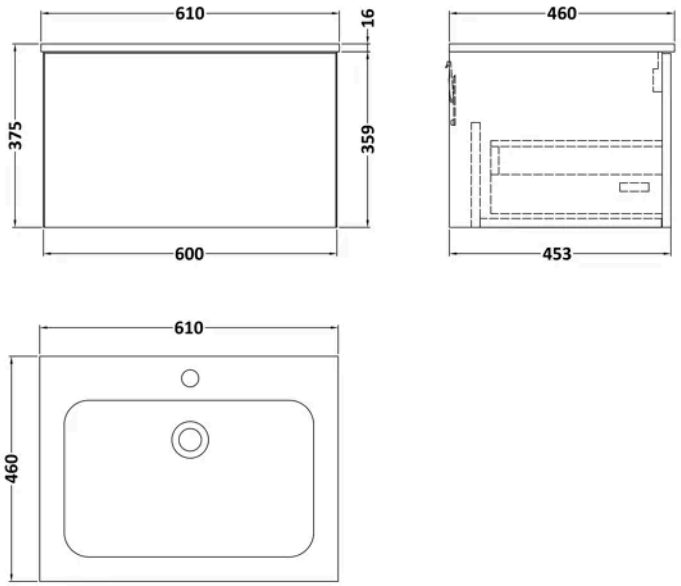

Product Dimensions

Product	375 x 610 x 460mm (H x W x D)
Packaged	425 x 605 x 460mm (H x W x D)
Nett Weight	27 kg
Packaged Weight	27 kg

Product Details

Country of Origin	United Kingdom
Product Material	Mfc Smooth Matt,Stone
Colour/Finish	Soft Black
Mount Type	Wall Hung
Style	Contemporary
Construction Method	Cam & Wood Dowel
Construction Type	Rigid
Fascia Finish	Mdf Vinyl Smooth Matt
Handles Included	Yes
Inner Bowl Height	128 mm
Leg Set Included	No
Material Thickness	18 mm
No. Drawers	1
No. Of Tapholes	1
Number Of Bowls	1
Overflow Cover Included	Yes
Overflow Included	Yes
Tap Included	No
Waste Included	No
Waste Shroud	No

© ROXOR Group

Sales Code: LSL1422 **Barcode:** 5056817711245 **Brand:** nuie Lux **Description:** nuie lux Kivo Soft Black 600mm 1 Drawer Wall Hung Vanity Unit

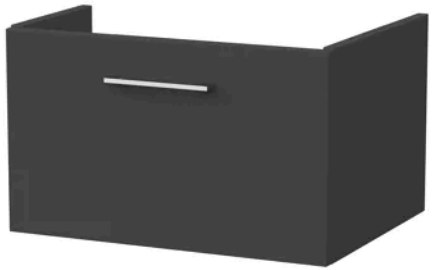

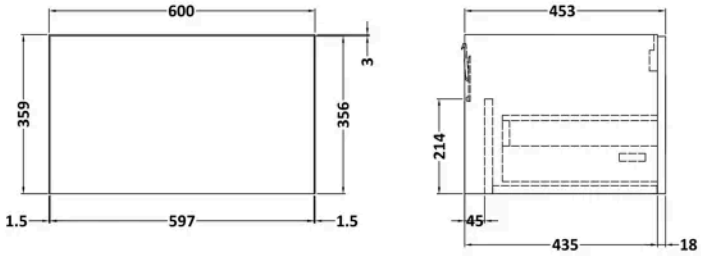

Product Dimensions

Product	359 x 600 x 455mm (H x W x D)
Packaged	380 x 620 x 405mm (H x W x D)
Nett Weight	12.5 kg
Packaged Weight	13 kg

Packaging Details

Box Qty	1

Product Details

Country of Origin	United Kingdom
Product Material	Mfc Smooth Matt
Colour/Finish	Soft Black
Mount Type	Wall Hung
Style	Contemporary
Construction Method	Cam & Wood Dowel
Construction Type	Rigid
Drawer Type	80mm High Metal S/C Inc Gallery
Fascia Finish	Mdf Vinyl Smooth Matt
Handles Included	No
Material Thickness	18 mm
No. Drawers	1
Waste Shroud	Yes

© ROXOR Group

Sales Code: LXSB903 **Barcode:** 5056883750476 **Brand:** nuie Lux **Description:** 610 x 460mm Basin 1T/H



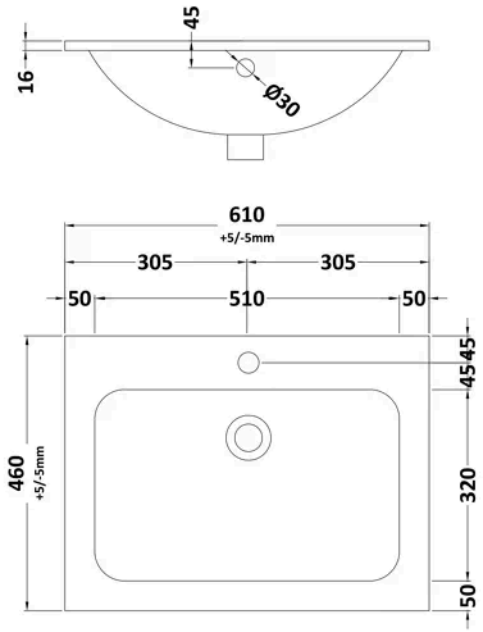

Product Dimensions

Product	610 x 460mm (W x D)
Packaged	200 x 675 x 530mm (H x W x D)
Nett Weight	13.5 kg
Packaged Weight	14 kg

Packaging Details

Box Qty	1

Product Details

Country of Origin	China
Product Material	Stone
Colour/Finish	Carrera Marble
Style	Contemporary
Bottle Trap Included	No
Ce Certified	Yes
Inner Bowl Depth	320 mm
Inner Bowl Height	128 mm
Inner Bowl Width	510 mm
No. Of Tapholes	1
Number Of Bowls	1
Overflow Cover Included	Yes
Overflow Included	Yes
Tap Included	No
Waste Included	No

© ROXOR Group