**Sales Code:** LSL126Q **Barcode:** 5056883752258 **Brand:** nuie Lux **Description:** nuie lux Kivo Matt White 800mm Wall Hung 2-Drawer Unit & Stone Basin 1TH



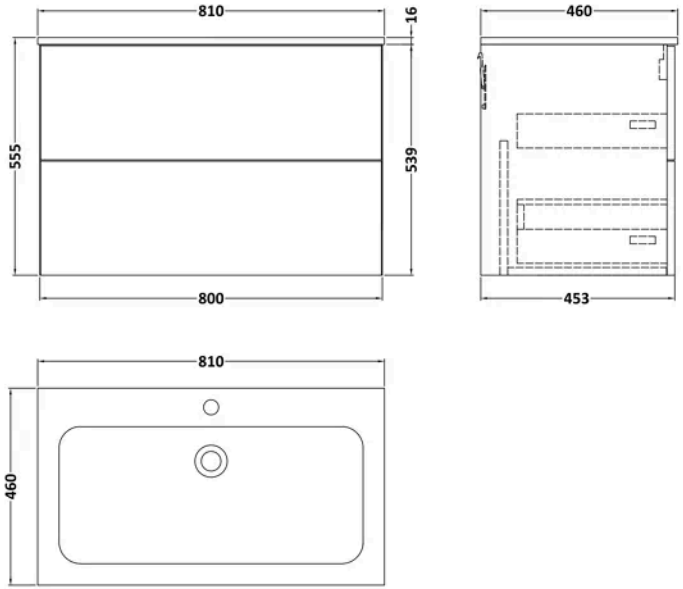


## Product Dimensions

| | |
|---|---|
| Product | 555 x 810 x 460mm (H x W x D) |
| Packaged | 550 x 550 x 550mm (H x W x D) |
| Nett Weight | 40.5 kg |
| Packaged Weight | 40.5 kg |

## Product Details

| | |
|---|---|
| Country of Origin | United Kingdom |
| Product Material | Mfc Smooth Matt,Stone |
| Colour/Finish | Matt White |
| Mount Type | Wall Hung |
| Style | Contemporary |
| Construction Method | Cam & Wood Dowel |
| Construction Type | Rigid |
| Fascia Finish | Mdf Vinyl Smooth Matt |
| Handles Included | Yes |
| Inner Bowl Height | 128 mm |
| Leg Set Included | No |
| Material Thickness | 18 mm |
| No. Drawers | 2 |
| No. Of Tapholes | 1 |
| Number Of Bowls | 1 |
| Overflow Cover Included | Yes |
| Overflow Included | Yes |
| Tap Included | No |
| Waste Included | No |
| Waste Shroud | No |

© ROXOR Group

**Sales Code:** LSL126 **Barcode:** 5056817711450 **Brand:** nuie Lux **Description:** nuie lux Kivo Matt White 800mm 2 Drawer Wall Hung Vanity Unit



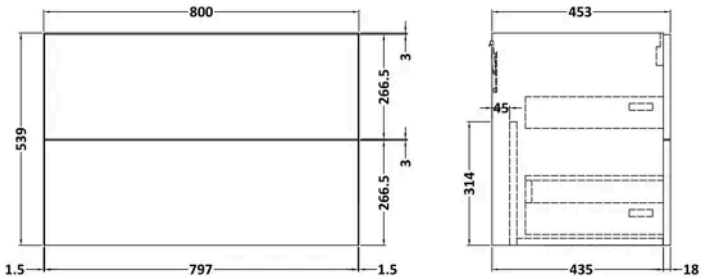


## Product Dimensions

| | |
|---|---|
| Product | 539 x 800 x 455mm (H x W x D) |
| Packaged | 560 x 820 x 405mm (H x W x D) |
| Nett Weight | 23.5 kg |
| Packaged Weight | 24 kg |

## Packaging Details

| | |
|---|---|
| Box Qty | 1 |

## Product Details

| | |
|---|---|
| Country of Origin | United Kingdom |
| Product Material | Mfc Smooth Matt |
| Colour/Finish | Matt White |
| Mount Type | Wall Hung |
| Style | Contemporary |
| Construction Method | Cam & Wood Dowel |
| Construction Type | Rigid |
| Drawer Type | 80mm High Metal S/C Inc Gallery |
| Fascia Finish | Mdf Vinyl Smooth Matt |
| Handles Included | No |
| Material Thickness | 18 mm |
| No. Drawers | 2 |
| Waste Shroud | Yes |

© ROXOR Group

**Sales Code:** LXSB905 **Barcode:** 5056883750483 **Brand:** nuie Lux **Description:** 810 x 460mm Basin 1T/H



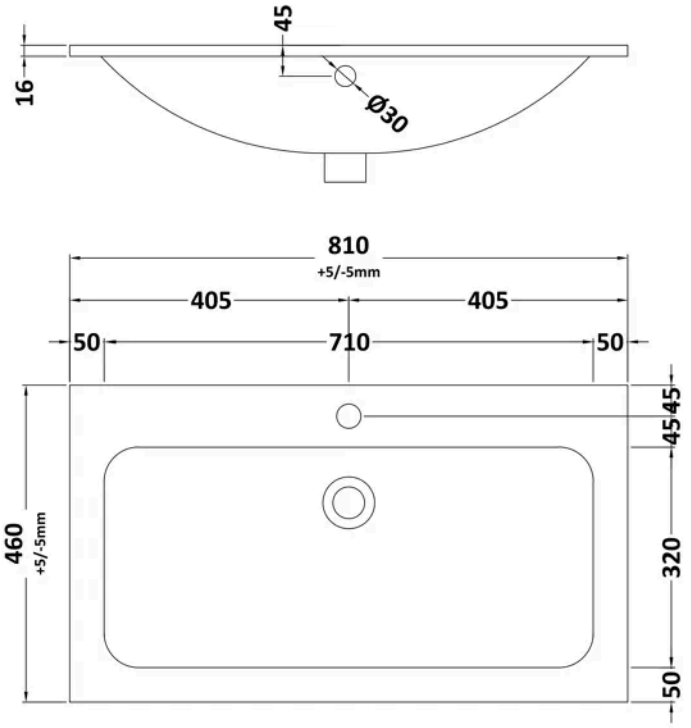


## Product Dimensions

| | |
|---|---|
| Product | 810 x 460mm (W x D) |
| Packaged | 200 x 875 x 530mm (H x W x D) |
| Nett Weight | 16 kg |
| Packaged Weight | 16.5 kg |

## Packaging Details

| | |
|---|---|
| Box Qty | 1 |

## Product Details

| | |
|---|---|
| Country of Origin | China |
| Product Material | Stone |
| Colour/Finish | Carrera Marble |
| Style | Contemporary |
| Bottle Trap Included | No |
| Ce Certified | Yes |
| Inner Bowl Depth | 320 mm |
| Inner Bowl Height | 128 mm |
| Inner Bowl Width | 710 mm |
| No. Of Tapholes | 1 |
| Number Of Bowls | 1 |
| Overflow Cover Included | Yes |
| Overflow Included | Yes |
| Tap Included | No |
| Waste Included | No |

© ROXOR Group