Sales Code: LSL122L

Barcode: 5056817784881

Brand: nuie Lux

Description: nuie lux Kivo 600mm Matt White 1 Drawer Wall Hung Vanity Unit With 1 Tap Hole Fireclay Square Basin



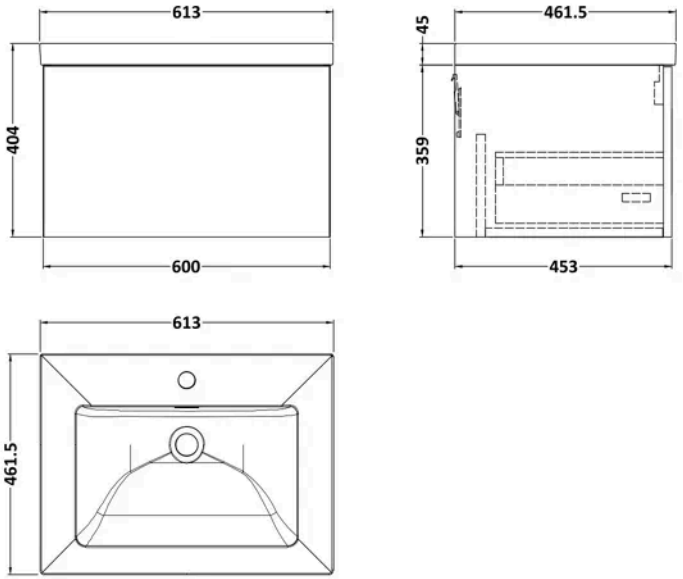

Product Dimensions

Product	404 x 605 x 460mm (H x W x D)
Packaged	550 x 550 x 550mm (H x W x D)
Nett Weight	30 kg
Packaged Weight	30 kg

Product Details

Country of Origin	United Kingdom
Product Material	Fireclay,Mfc Smooth Matt
Colour/Finish	Matt White
Mount Type	Wall Hung
Style	Contemporary
Construction Method	Cam & Wood Dowel
Construction Type	Rigid
Drawer Type	80mm High Metal S/C Inc Gallery
Fascia Finish	Mdf Vinyl Smooth Matt
Handles Included	No
Inner Bowl Height	135 mm
Material Thickness	18 mm
No. Drawers	1
No. Of Tapholes	1
Number Of Bowls	1
Overflow Included	Yes
Tap Included	No
Waste Shroud	Yes

© ROXOR Group

Sales Code: LSL122 **Barcode:** 5056817711429 **Brand:** nuie Lux **Description:** nuie lux Kivo 600mm Matt White 1 Drawer Wall Hung Vanity Unit

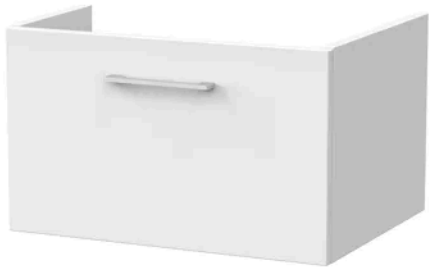

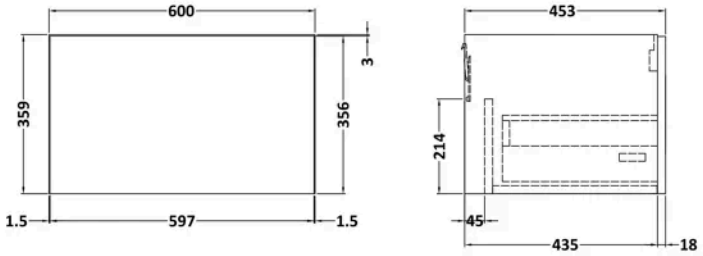

Product Dimensions

Product	359 x 600 x 455mm (H x W x D)
Packaged	380 x 620 x 405mm (H x W x D)
Nett Weight	12.5 kg
Packaged Weight	13 kg

Packaging Details

Box Qty	1

Product Details

Country of Origin	United Kingdom
Product Material	Mfc Smooth Matt
Colour/Finish	Matt White
Mount Type	Wall Hung
Style	Contemporary
Construction Method	Cam & Wood Dowel
Construction Type	Rigid
Drawer Type	80mm High Metal S/C Inc Gallery
Fascia Finish	Mdf Vinyl Smooth Matt
Handles Included	No
Material Thickness	18 mm
No. Drawers	1
Waste Shroud	Yes

© ROXOR Group

Sales Code: LXCB603 **Barcode:** 5056817728021 **Brand:** nuie Lux **Description:** nuie lux 1 Tap Hole 600mm Contemporary Fireclay Basin



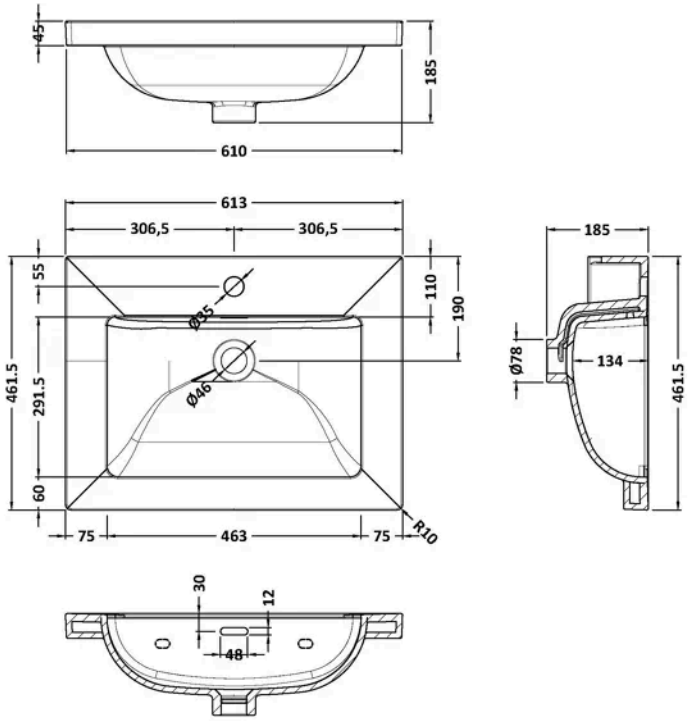

Product Dimensions

Product	45 x 610 x 460mm (H x W x D)
Packaged	490 x 650 x 220mm (H x W x D)
Nett Weight	17 kg
Packaged Weight	17 kg

Packaging Details

Box Qty	1
Label Size (mm)	100 x 50
Label Colour	White
Label Qty	2.0000

Product Details

Country of Origin	United Arab Emirates
Product Material	Fireclay
Colour/Finish	White
Style	Contemporary
Fixings Included	No
Bottle Trap Included	No
Ce Certified	Yes
Inner Bowl Depth	292 mm
Inner Bowl Height	135 mm
Inner Bowl Width	463 mm
No. Of Tapholes	1
Number Of Bowls	1
Overflow Cover Included	No
Overflow Included	Yes
Tap Included	No
Waste Included	No

© ROXOR Group