**Sales Code:** LSH3205WS1

**Barcode:** 5056817777371

**Brand:** nuie Lux

**Description:** nuie lux Larck 800mm Pebble Grey 2 Door Floor Standing Vanity Unit With 1 Tap Hole Marble Worktop



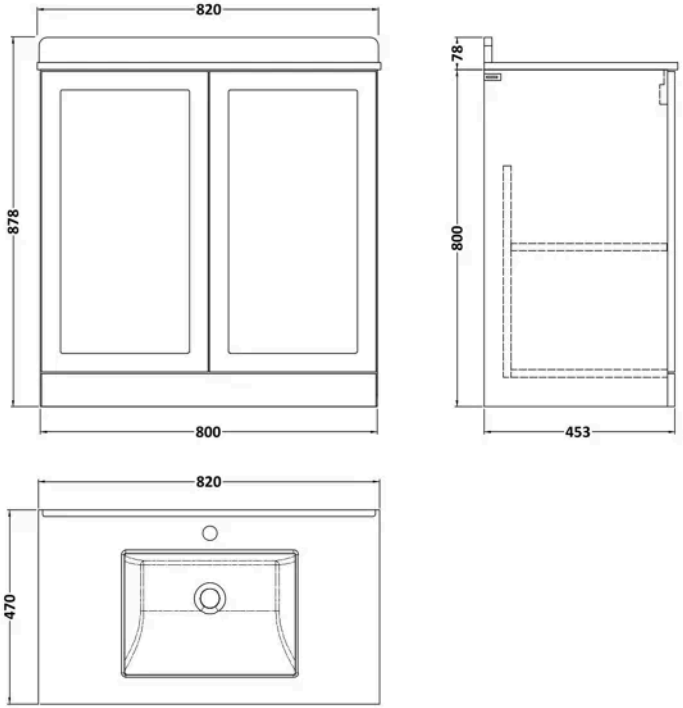


## Product Dimensions

| | |
|---|---|
| Product | 814 x 805 x 460mm (H x W x D) |
| Packaged | 550 x 550 x 550mm (H x W x D) |
| Nett Weight | 47 kg |
| Packaged Weight | 47 kg |

## Product Details

| | |
|---|---|
| Country of Origin | United Kingdom |
| Product Material | Mfc Smooth Matt,Vitreous China |
| Colour/Finish | Pebble Grey |
| Mount Type | Floor |
| Style | Traditional |
| Construction Method | Cam & Wood Dowel |
| Construction Type | Rigid |
| Fascia Finish | Mdf Vinyl Smooth Matt |
| Handles Included | No |
| Inner Bowl Height | 160 mm |
| Material Thickness | 18 mm |
| No. Doors | 2 |
| No. Of Tapholes | 1 |
| No. Shelves | 1 |
| Number Of Bowls | 1 |
| Number Of Shelves | 1 |
| Overflow Included | No |
| Tap Included | No |
| Waste Shroud | No |

© ROXOR Group

**Sales Code:** LSH3205 **Barcode:** 5056817713461 **Brand:** nuie Lux **Description:** nuie lux Larck 800mm Pebble Grey 2 Door Floor Standing Vanity Unit



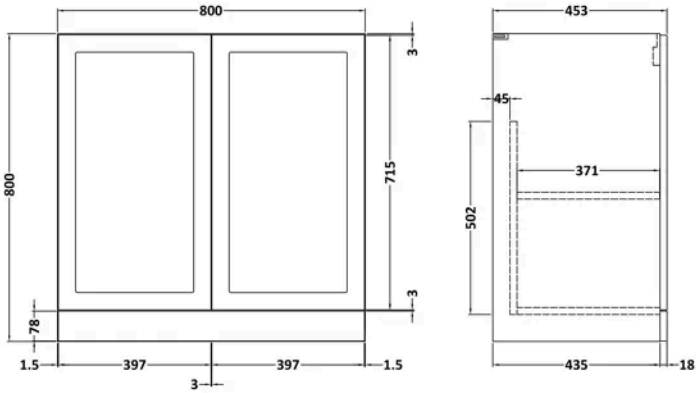


## Product Dimensions

| | |
|---|---|
| Product | 800 x 800 x 455mm (H x W x D) |
| Packaged | 820 x 820 x 405mm (H x W x D) |
| Nett Weight | 25.5 kg |
| Packaged Weight | 26 kg |

## Packaging Details

| | |
|---|---|
| Box Qty | 1 |

## Product Details

| | |
|---|---|
| Country of Origin | United Kingdom |
| Product Material | Mfc Smooth Matt |
| Colour/Finish | Pebble Grey |
| Mount Type | Floor |
| Style | Traditional |
| Construction Method | Cam & Wood Dowel |
| Construction Type | Rigid |
| Fascia Finish | Mdf Vinyl Smooth Matt |
| Handles Included | No |
| Material Thickness | 18 mm |
| No. Doors | 2 |
| No. Shelves | 1 |
| Number Of Shelves | 1 |
| Waste Shroud | No |

© ROXOR Group

**Sales Code:** LXMB228 **Barcode:** 5056817728205 **Brand:** nuie Lux **Description:** nuie lux 1 Tap Hole 800mm White Single Square Bowl Marble Worktop Basin



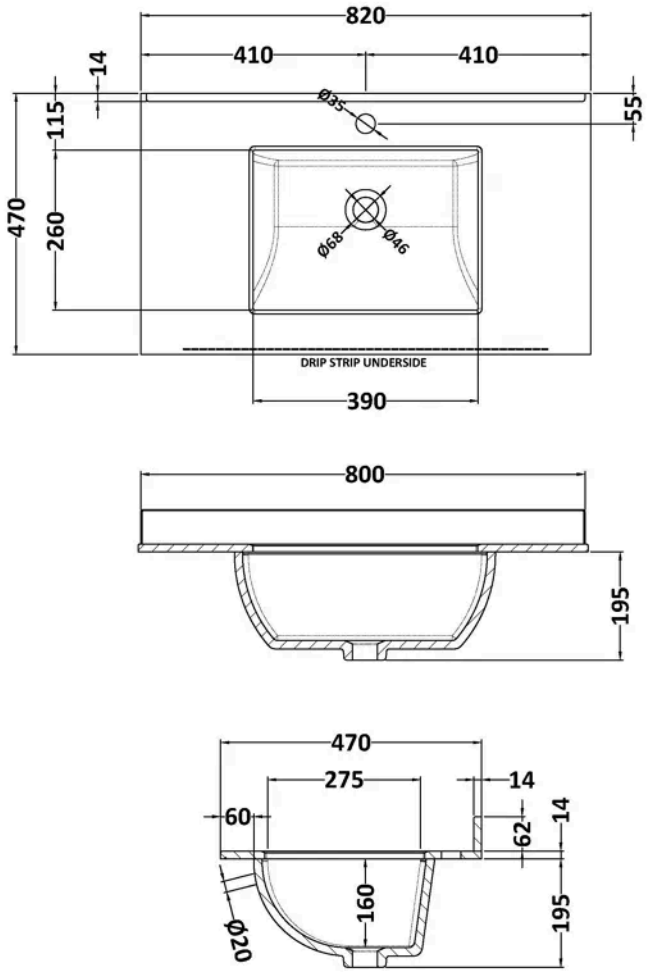


## Product Dimensions

| | |
|---|---|
| Product | 209 x 820 x 463mm (H x W x D) |
| Packaged | 250 x 900 x 580mm (H x W x D) |
| Nett Weight | 20.5 kg |
| Packaged Weight | 21 kg |

## Packaging Details

| | |
|---|---|
| Box Qty | 1 |
| Label Size (mm) | 50 x 100 |
| Label Colour | White |
| Label Qty | 2.0000 |

## Product Details

| | |
|---|---|
| Country of Origin | China |
| Product Material | Vitreous China |
| Colour/Finish | White |
| Style | Traditional |
| Bottle Trap Included | No |
| Ce Certified | Yes |
| Inner Bowl Depth | 275 mm |
| Inner Bowl Height | 160 mm |
| Inner Bowl Width | 390 mm |
| No. Of Tapholes | 1 |
| Number Of Bowls | 1 |
| Overflow Cover Included | No |
| Overflow Included | Yes |
| Tap Included | No |
| Waste Included | No |

© ROXOR Group