Sales Code: LSH1803WS1

Barcode: 5056817776992

Brand: nuie Lux

Description: nuie lux Larck 600mm Autumn Oak 2 Door Floor Standing Vanity Unit With 1 Tap Hole Marble Worktop



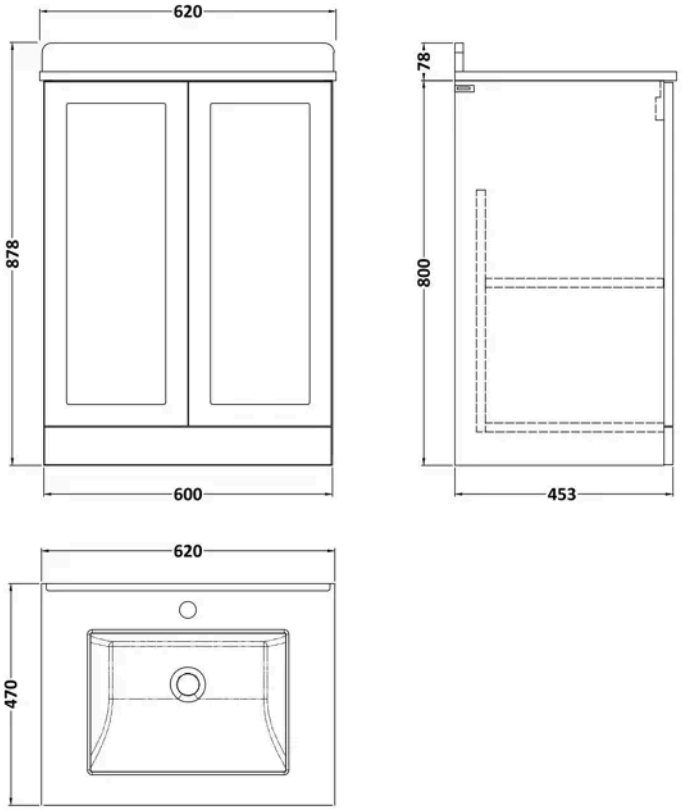

Product Dimensions

Product	814 x 605 x 460mm (H x W x D)
Packaged	550 x 550 x 550mm (H x W x D)
Nett Weight	37 kg
Packaged Weight	37 kg

Product Details

Country of Origin	United Kingdom
Product Material	Mfc Textured Woodgrain,Vitreous China
Colour/Finish	Autumn Oak
Mount Type	Floor
Style	Traditional
Construction Method	Cam & Wood Dowel
Construction Type	Rigid
Fascia Finish	Mdf Vinyl Textured Woodgrain
Handles Included	No
Inner Bowl Height	160 mm
Material Thickness	18 mm
No. Doors	2
No. Of Tapholes	1
No. Shelves	1
Number Of Bowls	1
Number Of Shelves	1
Overflow Included	No
Tap Included	No
Waste Shroud	No

© ROXOR Group

Sales Code: LSH1803 **Barcode:** 5056817711771 **Brand:** nuie Lux **Description:** nuie lux Larck 600mm Pebble Grey 2 Door Floor Standing Vanity Unit



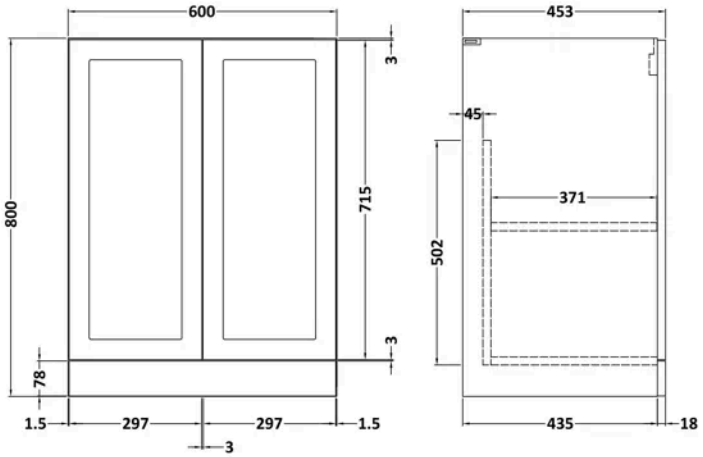

Product Dimensions

Product	800 x 600 x 455mm (H x W x D)
Packaged	820 x 620 x 405mm (H x W x D)
Nett Weight	19.5 kg
Packaged Weight	20 kg

Product Details

Country of Origin	United Kingdom
Product Material	Mfc Textured Woodgrain
Colour/Finish	Pebble Grey
Mount Type	Floor
Style	Traditional
Construction Method	Cam & Wood Dowel
Construction Type	Rigid
Fascia Finish	Mdf Vinyl Smooth Matt
Handles Included	No
Material Thickness	18 mm
No. Doors	2
No. Shelves	1
Number Of Shelves	1
Waste Shroud	No

© ROXOR Group

Sales Code: LXMB222 **Barcode:** 5056817728199 **Brand:** nuie Lux **Description:** nuie lux 1 Tap Hole 600mm White Single Square Bowl Marble Worktop Basin



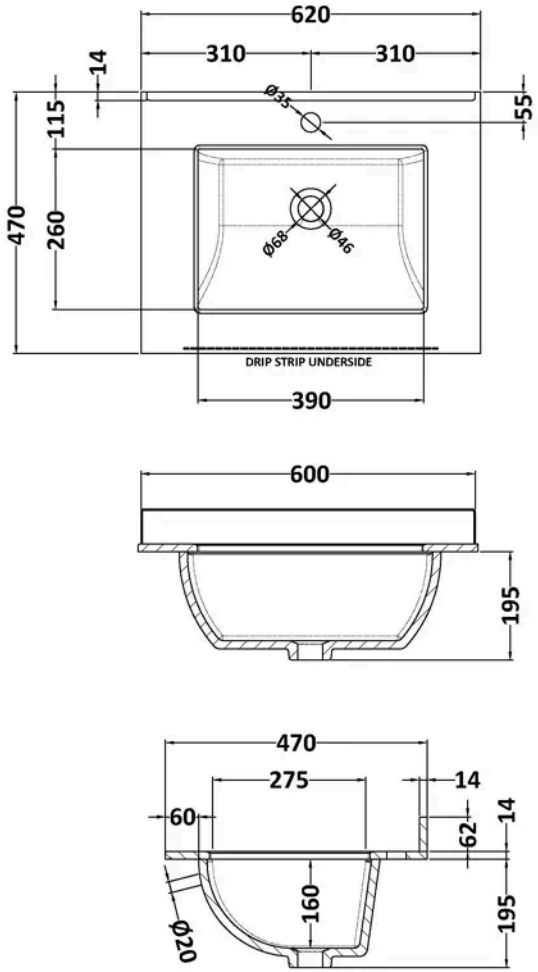

Product Dimensions

Product	209 x 620 x 470mm (H x W x D)
Packaged	250 x 700 x 580mm (H x W x D)
Nett Weight	16.5 kg
Packaged Weight	17 kg

Packaging Details

Label Size (mm)	50 x 100
Label Colour	White
Label Qty	2.0000

Product Details

Country of Origin	China
Product Material	Vitreous China
Colour/Finish	White
Style	Traditional
Bottle Trap Included	No
Ce Certified	Yes
Inner Bowl Depth	275 mm
Inner Bowl Height	160 mm
Inner Bowl Width	390 mm
No. Of Tapholes	1
Number Of Bowls	1
Overflow Cover Included	No
Overflow Included	Yes
Tap Included	No
Waste Included	No

© ROXOR Group