Sales Code: LSH1803W

Barcode: 5056817777005

Brand: nuie Lux

Description: nuie lux Larck 600mm Autumn Oak 2 Door Floor Standing Vanity Unit With Co-ordinating Worktop



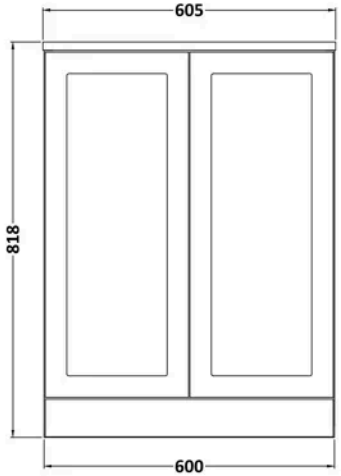

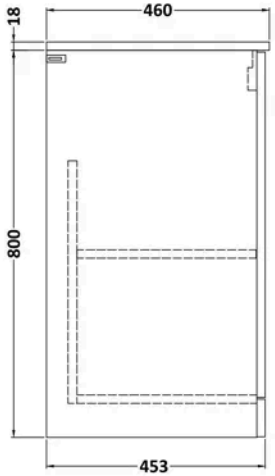

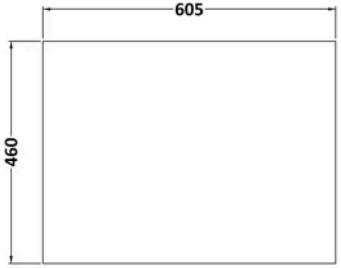

Product Dimensions

Product	818 x 605 x 460mm (H x W x D)
Packaged	550 x 550 x 550mm (H x W x D)
Nett Weight	22.7 kg
Packaged Weight	22.7 kg

Product Details

Country of Origin	United Kingdom
Product Material	Mfc Textured Woodgrain
Colour/Finish	Autumn Oak
Mount Type	Floor
Style	Traditional
Construction Method	Cam & Wood Dowel
Construction Type	Rigid
Fascia Finish	Mdf Vinyl Textured Woodgrain
Handles Included	No
Material Thickness	18 mm
No. Doors	2
No. Shelves	1
Number Of Shelves	1
Waste Shroud	No

© ROXOR Group

Sales Code: LSH1803 **Barcode:** 5056817711771 **Brand:** nuie Lux **Description:** nuie lux Larck 600mm Pebble Grey 2 Door Floor Standing Vanity Unit



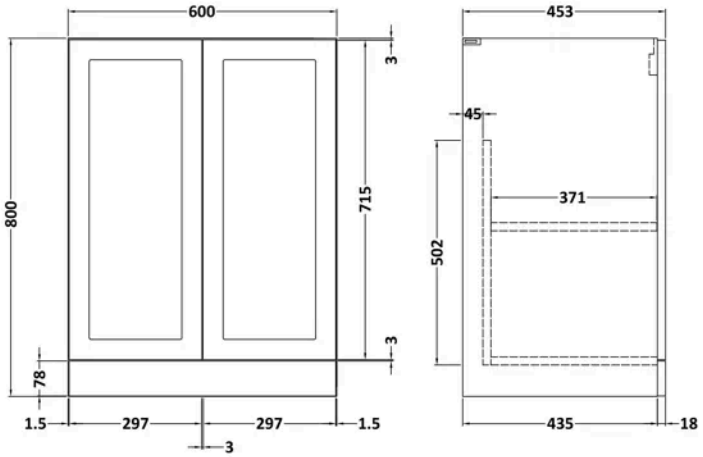

Product Dimensions

Product	800 x 600 x 455mm (H x W x D)
Packaged	820 x 620 x 405mm (H x W x D)
Nett Weight	19.5 kg
Packaged Weight	20 kg

Product Details

Country of Origin	United Kingdom
Product Material	Mfc Textured Woodgrain
Colour/Finish	Pebble Grey
Mount Type	Floor
Style	Traditional
Construction Method	Cam & Wood Dowel
Construction Type	Rigid
Fascia Finish	Mdf Vinyl Smooth Matt
Handles Included	No
Material Thickness	18 mm
No. Doors	2
No. Shelves	1
Number Of Shelves	1
Waste Shroud	No

© ROXOR Group

Sales Code: MWT18660 **Barcode:** 5056678471265 **Brand:** Hudson Reed **Description:** nuie lux 605 x 460mm Autumn Oak Furniture Worktop



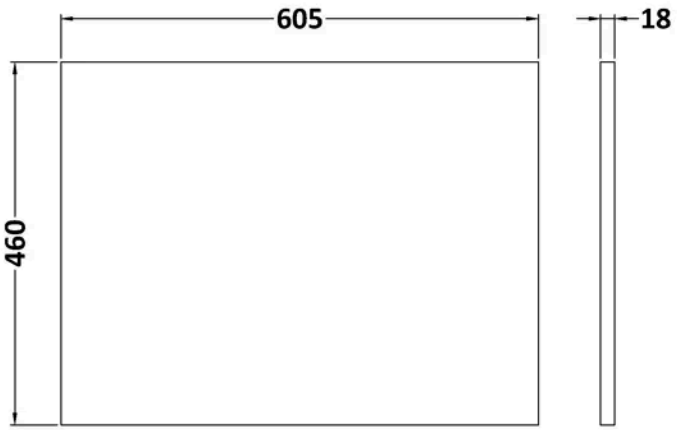

Product Dimensions

Product	18 x 460 x 605mm (H x W x D)
Packaged	20 x 610 x 465mm (H x W x D)
Nett Weight	2.2 kg
Packaged Weight	2.7 kg

Product Details

Country of Origin	United Kingdom
Product Material	Mfc
Colour/Finish	Autumn Oak
Style	Contemporary

© ROXOR Group