**Sales Code:** LSH1424K

**Barcode:** 5056817780470

**Brand:** nuie Lux

**Description:** nuie lux Larck 600mm Soft Black 2 Drawer Wall Hung Vanity Unit With Fireclay Square Basin



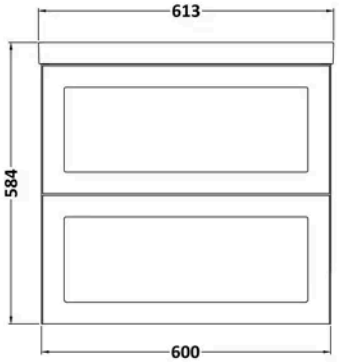


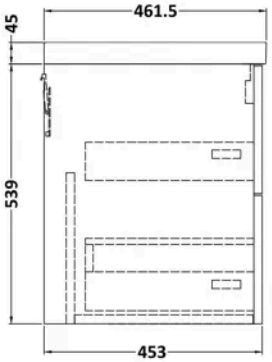


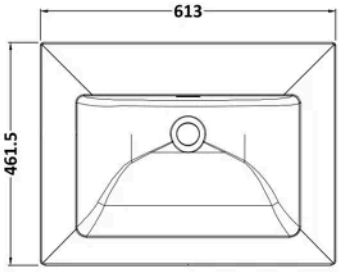


## Product Dimensions

| | |
|---|---|
| Product | 584 x 605 x 460mm (H x W x D) |
| Packaged | 584 x 605 x 460mm (H x W x D) |
| Nett Weight | 39 kg |
| Packaged Weight | 39 kg |

## Product Details

| | |
|---|---|
| Country of Origin | United Kingdom |
| Product Material | Fireclay,Mfc Smooth Matt |
| Colour/Finish | Soft Black |
| Mount Type | Wall Hung |
| Style | Traditional |
| Construction Method | Cam & Wood Dowel |
| Construction Type | Rigid |
| Drawer Type | 80mm High Metal S/C Inc Gallery |
| Fascia Finish | Mdf Vinyl Smooth Matt |
| Handles Included | No |
| Inner Bowl Height | 135 mm |
| Material Thickness | 18 mm |
| No. Drawers | 2 |
| No. Of Tapholes | No Tapholes |
| Number Of Bowls | 1 |
| Overflow Included | Yes |
| Tap Included | No |
| Waste Shroud | Yes |

© ROXOR Group

**Sales Code:** LSH1424 **Barcode:** 5056817711719 **Brand:** nuie Lux **Description:** nuie lux Larck 600mm Soft Black 2 Drawer Wall Hung Vanity Unit



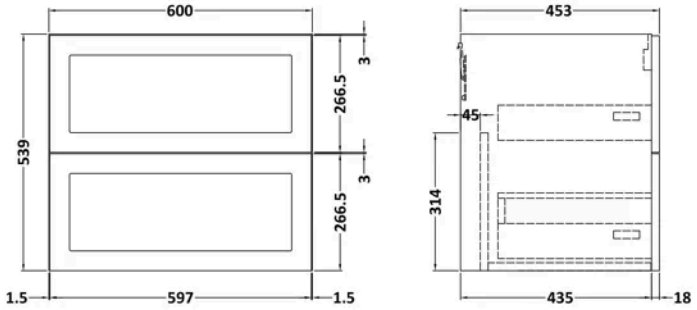


## Product Dimensions

| | |
|---|---|
| Product | 539 x 600 x 455mm (H x W x D) |
| Packaged | 560 x 620 x 405mm (H x W x D) |
| Nett Weight | 21.5 kg |
| Packaged Weight | 22 kg |

## Packaging Details

| | |
|---|---|
| Box Qty | 1 |

## Product Details

| | |
|---|---|
| Country of Origin | United Kingdom |
| Product Material | Mfc Smooth Matt |
| Colour/Finish | Soft Black |
| Mount Type | Wall Hung |
| Style | Traditional |
| Construction Method | Cam & Wood Dowel |
| Construction Type | Rigid |
| Drawer Type | 80mm High Metal S/C Inc Gallery |
| Fascia Finish | Mdf Vinyl Smooth Matt |
| Handles Included | No |
| Material Thickness | 18 mm |
| No. Drawers | 2 |
| Waste Shroud | Yes |

© ROXOR Group

**Sales Code:** LXCB613 **Barcode:** 5056817728014 **Brand:** nuie Lux **Description:** nuie lux 0 Tap Hole 600mm Contemporary Fireclay Basin



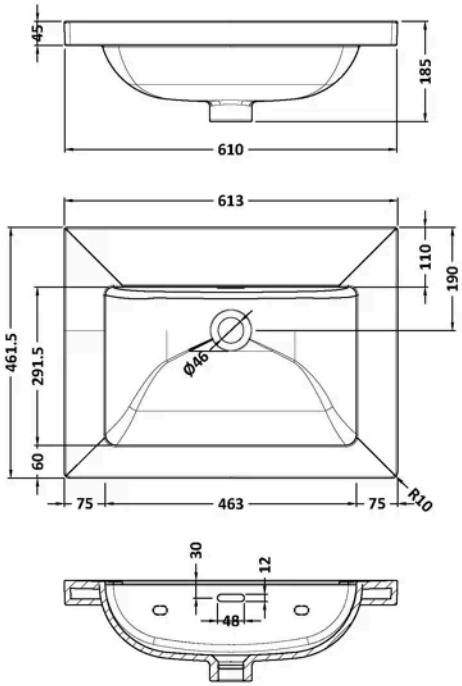


## Product Dimensions

| | |
|---|---|
| Product | 45 x 610 x 460mm (H x W x D) |
| Packaged | 490 x 650 x 220mm (H x W x D) |
| Nett Weight | 17 kg |
| Packaged Weight | 17 kg |

## Packaging Details

| | |
|---|---|
| Box Qty | 1 |
| Label Size (mm) | 100 x 50 |
| Label Colour | White |
| Label Qty | 2.0000 |

## Product Details

| | |
|---|---|
| Country of Origin | United Arab Emirates |
| Product Material | Fireclay |
| Colour/Finish | White |
| Style | Contemporary |
| Fixings Included | No |
| Bottle Trap Included | No |
| Ce Certified | Yes |
| Inner Bowl Depth | 292 mm |
| Inner Bowl Height | 135 mm |
| Inner Bowl Width | 463 mm |
| No. Of Tapholes | No Tapholes |
| Number Of Bowls | 1 |
| Overflow Cover Included | No |
| Overflow Included | Yes |
| Tap Included | No |
| Waste Included | No |

© ROXOR Group