Sales Code: LSH1424A

Barcode: 5056817780456

Brand: nuie Lux

Description: nuie lux Larck 600mm Soft Black 2 Drawer Wall Hung Vanity Unit With 1 Tap Hole Fireclay Basin



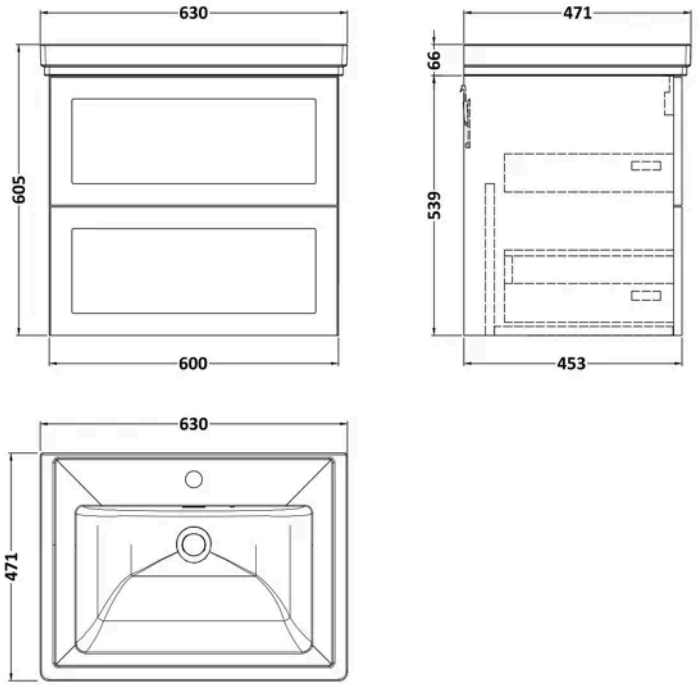

Product Dimensions

Product	605 x 605 x 460mm (H x W x D)
Packaged	605 x 605 x 460mm (H x W x D)
Nett Weight	39 kg
Packaged Weight	39 kg

Product Details

Country of Origin	United Kingdom
Product Material	Fireclay,Mfc Smooth Matt
Colour/Finish	Soft Black
Mount Type	Wall Hung
Style	Traditional
Construction Method	Cam & Wood Dowel
Construction Type	Rigid
Drawer Type	80mm High Metal S/C Inc Gallery
Fascia Finish	Mdf Vinyl Smooth Matt
Handles Included	No
Inner Bowl Height	135 mm
Material Thickness	18 mm
No. Drawers	2
No. Of Tapholes	1
Number Of Bowls	1
Overflow Included	Yes
Tap Included	No
Waste Shroud	Yes

© ROXOR Group

Sales Code: LSH1424 **Barcode:** 5056817711719 **Brand:** nuie Lux **Description:** nuie lux Larck 600mm Soft Black 2 Drawer Wall Hung Vanity Unit



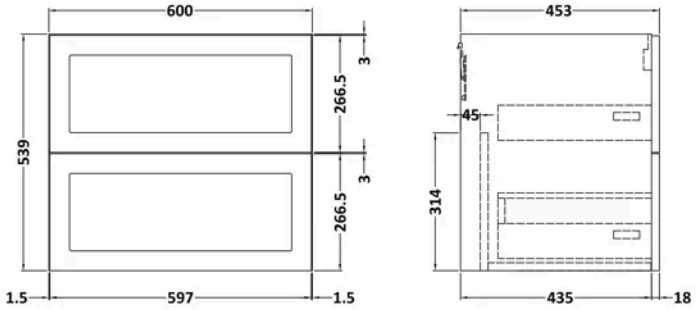

Product Dimensions

Product	539 x 600 x 455mm (H x W x D)
Packaged	560 x 620 x 405mm (H x W x D)
Nett Weight	21.5 kg
Packaged Weight	22 kg

Product Details

Country of Origin	United Kingdom
Product Material	Mfc Smooth Matt
Colour/Finish	Soft Black
Mount Type	Wall Hung
Style	Traditional
Construction Method	Cam & Wood Dowel
Construction Type	Rigid
Drawer Type	80mm High Metal S/C Inc Gallery
Fascia Finish	Mdf Vinyl Smooth Matt
Handles Included	No
Material Thickness	18 mm
No. Drawers	2
Waste Shroud	Yes

© ROXOR Group

Sales Code: LXCB503 **Barcode:** 5056817727963 **Brand:** nuie Lux **Description:** nuie lux 1 Tap Hole 600mm Traditional Fireclay Basin



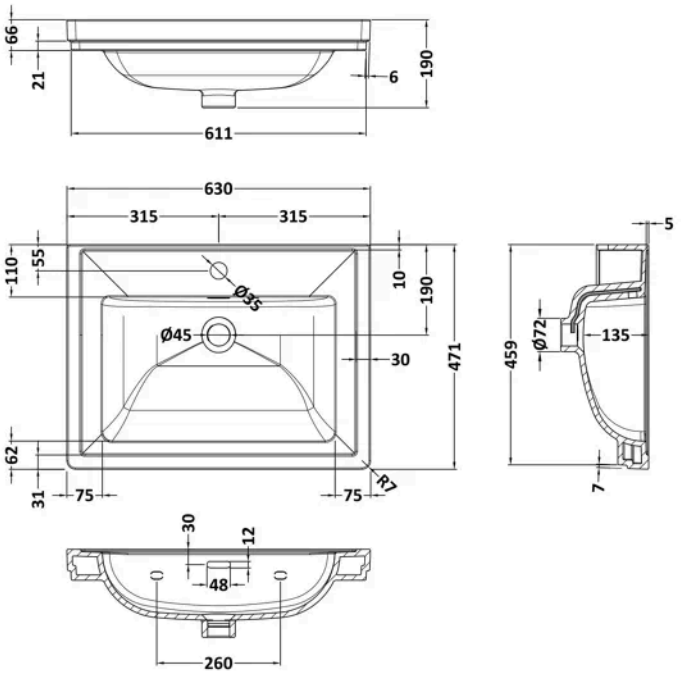

Product Dimensions

Product	190 x 630 x 471mm (H x W x D)
Packaged	490 x 650 x 220mm (H x W x D)
Nett Weight	17 kg
Packaged Weight	17 kg

Packaging Details

Label Size (mm)	50 x 100
Label Colour	White
Label Qty	2.0000

Product Details

Country of Origin	United Arab Emirates
Product Material	Fireclay
Colour/Finish	White
Style	Contemporary
Bottle Trap Included	No
Ce Certified	Yes
Inner Bowl Depth	300 mm
Inner Bowl Height	135 mm
Inner Bowl Width	480 mm
No. Of Tapholes	1
Number Of Bowls	1
Overflow Cover Included	No
Overflow Included	Yes
Tap Included	No
Waste Included	No

© ROXOR Group