**Sales Code:** LSH1403LSWG

**Barcode:** 5056817776831

**Brand:** nuie Lux

**Description:** nuie lux Larck 600mm Soft Black 2 Door Floor Standing Vanity Unit With Slate Grey Worktop



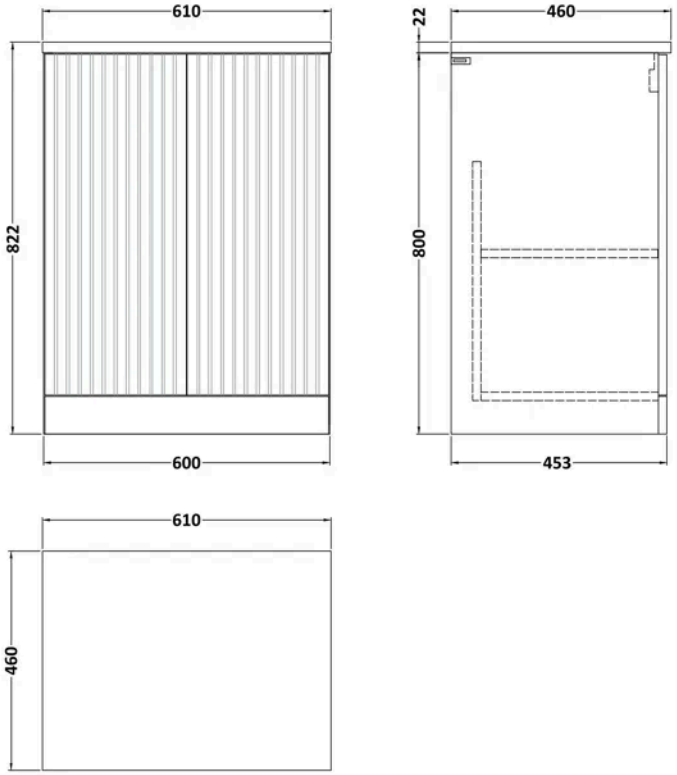


## Product Dimensions

| | |
|---|---|
| Product | 818 x 605 x 460mm (H x W x D) |
| Packaged | 818 x 605 x 460mm (H x W x D) |
| Nett Weight | 22 kg |
| Packaged Weight | 22 kg |

## Product Details

| | |
|---|---|
| Country of Origin | United Kingdom |
| Product Material | Mfc Laminated,Mfc Smooth Matt |
| Colour/Finish | Soft Black |
| Mount Type | Floor |
| Style | Traditional |
| Construction Method | Cam & Wood Dowel |
| Construction Type | Rigid |
| Fascia Finish | Mdf Vinyl Smooth Matt |
| Handles Included | No |
| Material Thickness | 18 mm |
| No. Doors | 2 |
| No. Shelves | 1 |
| Number Of Shelves | 1 |
| Waste Shroud | No |

© ROXOR Group

**Sales Code:** LSH1403 **Barcode:** 5056817711689 **Brand:** nuie Lux **Description:** nuie lux Larck 600mm Soft Black 2 Door Floor Standing Vanity Unit



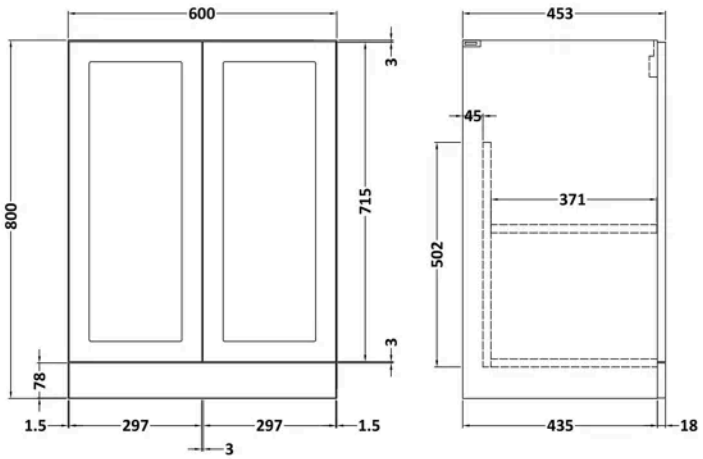


## Product Dimensions

| | |
|---|---|
| Product | 800 x 600 x 455mm (H x W x D) |
| Packaged | 820 x 620 x 405mm (H x W x D) |
| Nett Weight | 19.5 kg |
| Packaged Weight | 20 kg |

## Packaging Details

| | |
|---|---|
| Box Qty | 1 |

## Product Details

| | |
|---|---|
| Country of Origin | United Kingdom |
| Product Material | Mfc Smooth Matt |
| Colour/Finish | Soft Black |
| Mount Type | Floor |
| Style | Traditional |
| Construction Method | Cam & Wood Dowel |
| Construction Type | Rigid |
| Fascia Finish | Mdf Vinyl Smooth Matt |
| Handles Included | No |
| Material Thickness | 18 mm |
| No. Doors | 2 |
| No. Shelves | 1 |
| Number Of Shelves | 1 |
| Waste Shroud | No |

© ROXOR Group

**Sales Code:** LX6046WS **Barcode:** 5056817726164 **Brand:** nuie Lux **Description:** nuie lux 605 x 460mm Laminate White Sparkle Grain Worktop



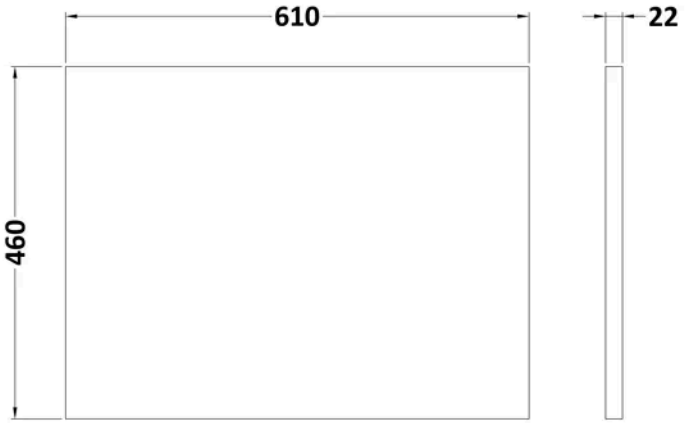


## Product Dimensions

| | |
|---|---|
| Product | 22 x 605 x 460mm (H x W x D) |
| Packaged | 20 x 520 x 610mm (H x W x D) |
| Nett Weight | 2 kg |
| Packaged Weight | 2 kg |

## Packaging Details

| | |
|---|---|
| Box Qty | 1 |

## Product Details

| | |
|---|---|
| Country of Origin | United Kingdom |
| Product Material | Mfc Laminated |
| Colour/Finish | White Sparkle Grain |
| Style | Contemporary |

© ROXOR Group