**Sales Code:** LSH1403E

**Barcode:** 5056817776701

**Brand:** nuie Lux

**Description:** nuie lux Larck 600mm Soft Black 2 Door Floor Standing Vanity Unit With 1 Tap Hole Square Basin



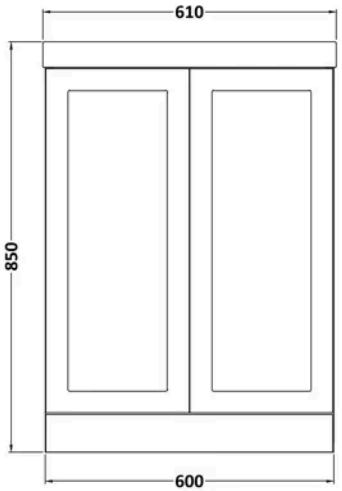


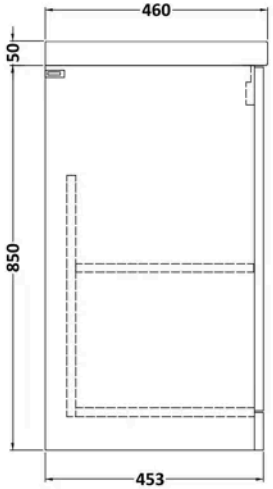


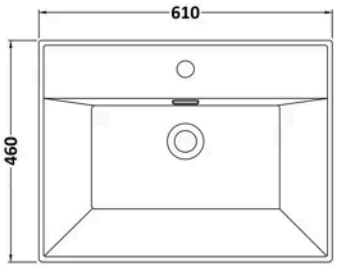


## Product Dimensions

| | |
|---|---|
| Product | 850 x 605 x 460mm (H x W x D) |
| Packaged | 850 x 605 x 460mm (H x W x D) |
| Nett Weight | 34 kg |
| Packaged Weight | 34 kg |

## Product Details

| | |
|---|---|
| Country of Origin | United Kingdom |
| Product Material | Mfc Smooth Matt,Vitreous China |
| Colour/Finish | Soft Black |
| Mount Type | Floor |
| Style | Traditional |
| Construction Method | Cam & Wood Dowel |
| Construction Type | Rigid |
| Fascia Finish | Mdf Vinyl Smooth Matt |
| Handles Included | No |
| Inner Bowl Height | 98 mm |
| Material Thickness | 18 mm |
| No. Doors | 2 |
| No. Of Tapholes | 1 |
| No. Shelves | 1 |
| Number Of Bowls | 1 |
| Number Of Shelves | 1 |
| Overflow Included | Yes |
| Tap Included | No |
| Waste Shroud | No |

© ROXOR Group

**Sales Code:** LSH1403 **Barcode:** 5056817711689 **Brand:** nuie Lux **Description:** nuie lux Larck 600mm Soft Black 2 Door Floor Standing Vanity Unit



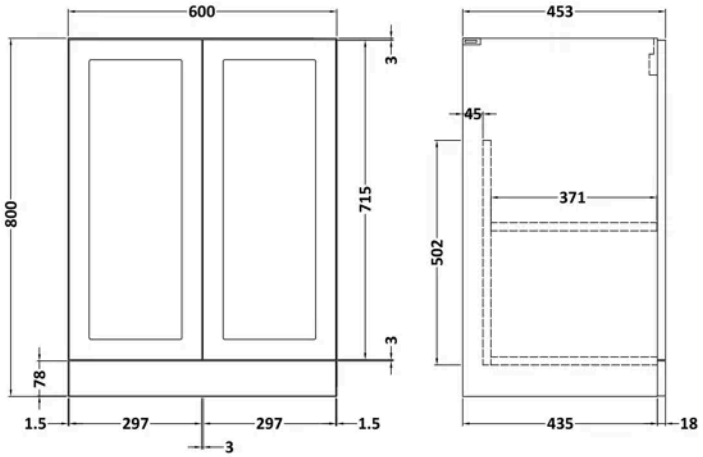


## Product Dimensions

| | |
|---|---|
| Product | 800 x 600 x 455mm (H x W x D) |
| Packaged | 820 x 620 x 405mm (H x W x D) |
| Nett Weight | 19.5 kg |
| Packaged Weight | 20 kg |

## Product Details

| | |
|---|---|
| Country of Origin | United Kingdom |
| Product Material | Mfc Smooth Matt |
| Colour/Finish | Soft Black |
| Mount Type | Floor |
| Style | Traditional |
| Construction Method | Cam & Wood Dowel |
| Construction Type | Rigid |
| Fascia Finish | Mdf Vinyl Smooth Matt |
| Handles Included | No |
| Material Thickness | 18 mm |
| No. Doors | 2 |
| No. Shelves | 1 |
| Number Of Shelves | 1 |
| Waste Shroud | No |

© ROXOR Group

**Sales Code:** LXNM063 **Barcode:** 5056817727932 **Brand:** nuie Lux **Description:** nuie lux 1 Tap Hole 600mm Thin Edge Ceramic Basin



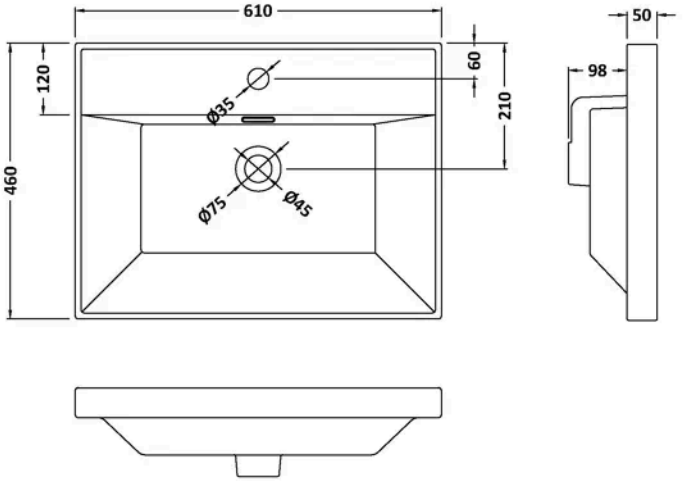


## Product Dimensions

| | |
|---|---|
| Product | 148 x 610 x 460mm (H x W x D) |
| Packaged | 170 x 625 x 480mm (H x W x D) |
| Nett Weight | 13.5 kg |
| Packaged Weight | 14 kg |

## Packaging Details

| | |
|---|---|
| Label Size (mm) | 100 x 50 |
| Label Colour | White |
| Label Qty | 2.0000 |

## Product Details

| | |
|---|---|
| Country of Origin | United Arab Emirates |
| Product Material | Vitreous China |
| Colour/Finish | White |
| Style | Contemporary |
| Fixings Included | No |
| Bottle Trap Included | No |
| Ce Certified | Yes |
| Inner Bowl Depth | 270 mm |
| Inner Bowl Height | 125 mm |
| Inner Bowl Width | 600 mm |
| No. Of Tapholes | 1 |
| Number Of Bowls | 1 |
| Overflow Cover Included | No |
| Overflow Included | Yes |
| Tap Included | No |
| Waste Included | No |

© ROXOR Group