**Sales Code:** LSH1403CMT

**Barcode:** 5056817776794

**Brand:** nuie Lux

**Description:** nuie lux Larck 600mm Soft Black 2 Door Floor Standing Vanity Unit With Marble Worktop



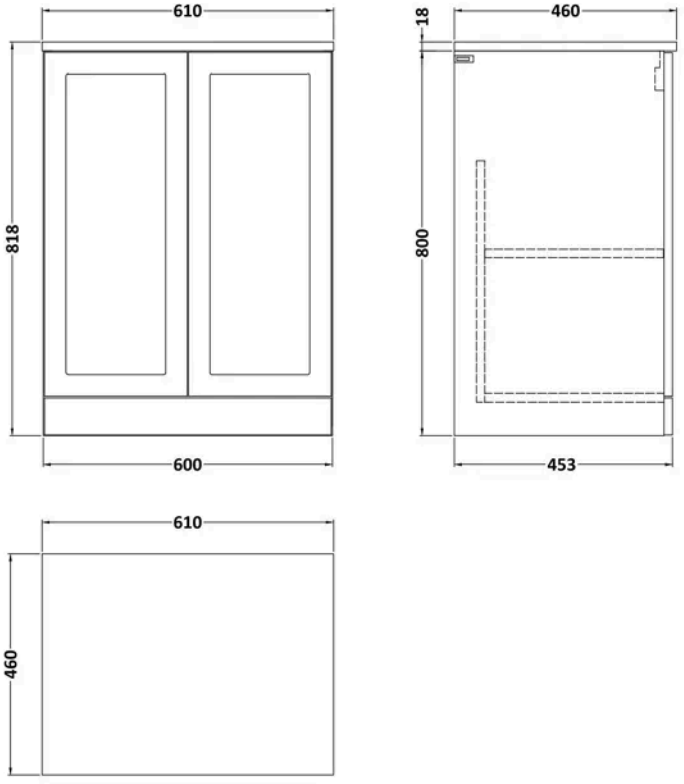


## Product Dimensions

| | |
|---|---|
| Product | 818 x 605 x 460mm (H x W x D) |
| Packaged | 818 x 605 x 460mm (H x W x D) |
| Nett Weight | 34 kg |
| Packaged Weight | 34 kg |

## Product Details

| | |
|---|---|
| Country of Origin | United Kingdom |
| Product Material | Mfc Smooth Matt,Natural Marble |
| Colour/Finish | Soft Black |
| Mount Type | Floor |
| Style | Traditional |
| Construction Method | Cam & Wood Dowel |
| Construction Type | Rigid |
| Fascia Finish | Mdf Vinyl Smooth Matt |
| Handles Included | No |
| Material Thickness | 18 mm |
| No. Doors | 2 |
| No. Shelves | 1 |
| Number Of Shelves | 1 |
| Overflow Included | No |
| Tap Included | No |
| Waste Shroud | No |

© ROXOR Group

**Sales Code:** LSH1403 **Barcode:** 5056817711689 **Brand:** nuie Lux **Description:** nuie lux Larck 600mm Soft Black 2 Door Floor Standing Vanity Unit



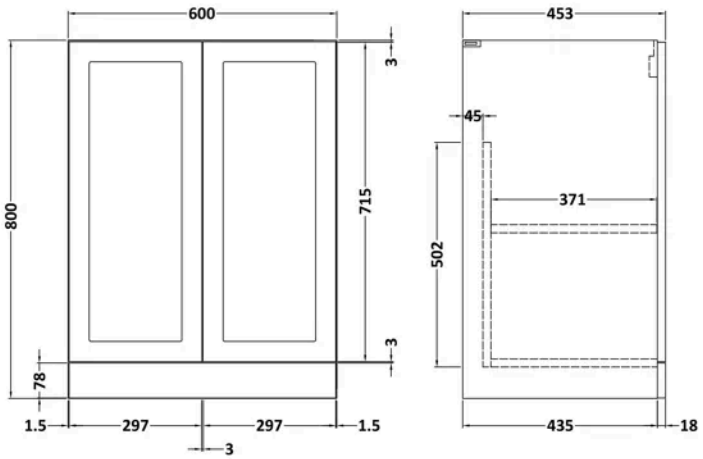


## Product Dimensions

| | |
|---|---|
| Product | 800 x 600 x 455mm (H x W x D) |
| Packaged | 820 x 620 x 405mm (H x W x D) |
| Nett Weight | 19.5 kg |
| Packaged Weight | 20 kg |

## Packaging Details

| | |
|---|---|
| Box Qty | 1 |

## Product Details

| | |
|---|---|
| Country of Origin | United Kingdom |
| Product Material | Mfc Smooth Matt |
| Colour/Finish | Soft Black |
| Mount Type | Floor |
| Style | Traditional |
| Construction Method | Cam & Wood Dowel |
| Construction Type | Rigid |
| Fascia Finish | Mdf Vinyl Smooth Matt |
| Handles Included | No |
| Material Thickness | 18 mm |
| No. Doors | 2 |
| No. Shelves | 1 |
| Number Of Shelves | 1 |
| Waste Shroud | No |

© ROXOR Group

**Sales Code:** LXMT96046 **Barcode:** 5056817728120 **Brand:** nuie Lux **Description:** nuie lux 610 x 460mm Carrera Marble Worktop



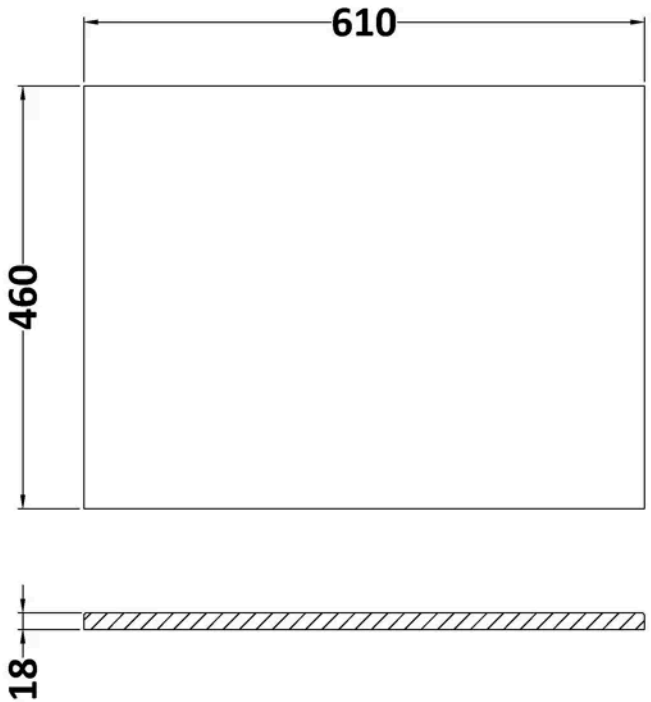


## Product Dimensions

| | |
|---|---|
| Product | 18 x 610 x 460mm (H x W x D) |
| Packaged | 35 x 650 x 500mm (H x W x D) |
| Nett Weight | 13.5 kg |
| Packaged Weight | 14 kg |

## Packaging Details

| | |
|---|---|
| Box Qty | 1 |
| Label Size (mm) | 50 x 100 |
| Label Colour | White |
| Label Qty | 1.0000 |

## Product Details

| | |
|---|---|
| Country of Origin | China |
| Product Material | Natural Marble |
| Colour/Finish | Carrera Marble |
| Style | Contemporary |
| Fixings Included | No |
| Fsc Certified | Yes |
| Material Thickness | 18 mm |

© ROXOR Group