Sales Code: LSH105WS1

Barcode: 5056817777180

Brand: nuie Lux

Description: nuie lux Larck 800mm Matt White 2 Door Floor Standing Vanity Unit With 1 Tap Hole Marble Worktop



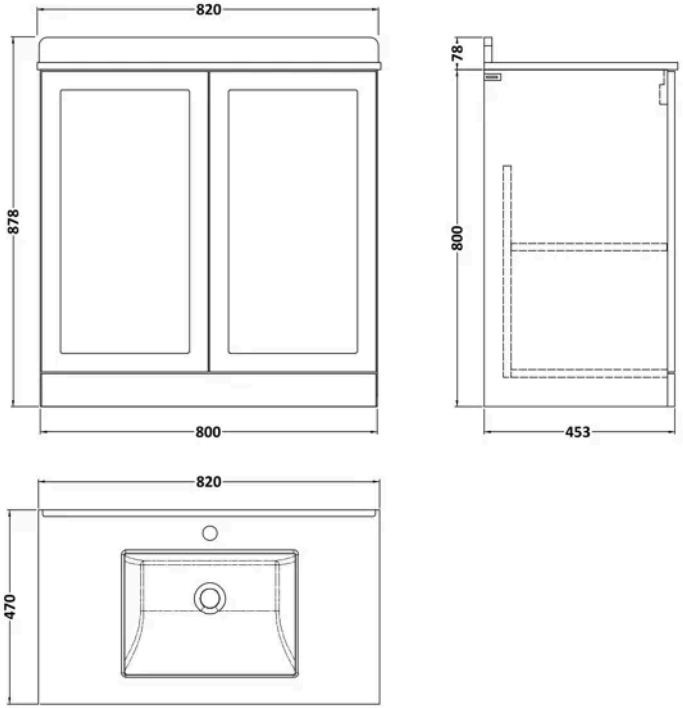

Product Dimensions

Product	814 x 805 x 460mm (H x W x D)
Packaged	550 x 550 x 550mm (H x W x D)
Nett Weight	47 kg
Packaged Weight	47 kg

Product Details

Country of Origin	United Kingdom
Product Material	Mfc Smooth Matt,Vitreous China
Colour/Finish	Matt White
Mount Type	Floor
Style	Traditional
Construction Method	Cam & Wood Dowel
Construction Type	Rigid
Fascia Finish	Mdf Vinyl Smooth Matt
Handles Included	No
Inner Bowl Height	160 mm
Material Thickness	18 mm
No. Doors	2
No. Of Tapholes	1
No. Shelves	1
Number Of Bowls	1
Number Of Shelves	1
Overflow Included	No
Tap Included	No
Waste Shroud	No

© ROXOR Group

Sales Code: LSH105 **Barcode:** 5056817713423 **Brand:** nuie Lux **Description:** nuie lux Larck 800mm Matt White 2 Door Floor Standing Vanity Unit



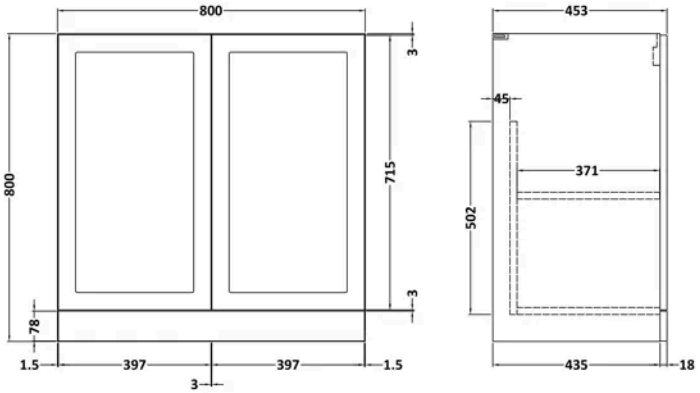

Product Dimensions

Product	800 x 800 x 455mm (H x W x D)
Packaged	820 x 820 x 405mm (H x W x D)
Nett Weight	25.5 kg
Packaged Weight	26 kg

Packaging Details

Box Qty	1

Product Details

Country of Origin	United Kingdom
Product Material	Mfc Smooth Matt
Colour/Finish	Matt White
Mount Type	Floor
Style	Traditional
Construction Method	Cam & Wood Dowel
Construction Type	Rigid
Fascia Finish	Mdf Vinyl Smooth Matt
Handles Included	No
Material Thickness	18 mm
No. Doors	2
No. Shelves	1
Number Of Shelves	1
Waste Shroud	No

© ROXOR Group

Sales Code: LXMB228 **Barcode:** 5056817728205 **Brand:** nuie Lux **Description:** nuie lux 1 Tap Hole 800mm White Single Square Bowl Marble Worktop Basin



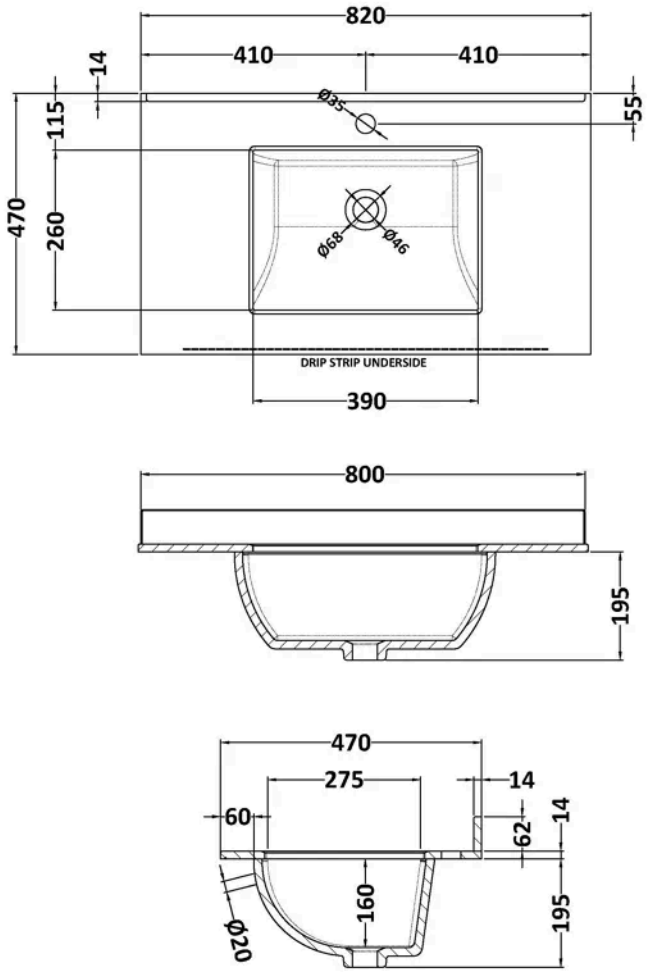

Product Dimensions

Product	209 x 820 x 463mm (H x W x D)
Packaged	250 x 900 x 580mm (H x W x D)
Nett Weight	20.5 kg
Packaged Weight	21 kg

Packaging Details

Box Qty	1
Label Size (mm)	50 x 100
Label Colour	White
Label Qty	2.0000

Product Details

Country of Origin	China
Product Material	Vitreous China
Colour/Finish	White
Style	Traditional
Bottle Trap Included	No
Ce Certified	Yes
Inner Bowl Depth	275 mm
Inner Bowl Height	160 mm
Inner Bowl Width	390 mm
No. Of Tapholes	1
Number Of Bowls	1
Overflow Cover Included	No
Overflow Included	Yes
Tap Included	No
Waste Included	No

© ROXOR Group