Sales Code: LSH103WMT

Barcode: 5056817776206

Brand: nuie Lux

Description: nuie lux Larck 600mm Matt White 2 Door Floor Standing Vanity Unit With White Marble Worktop



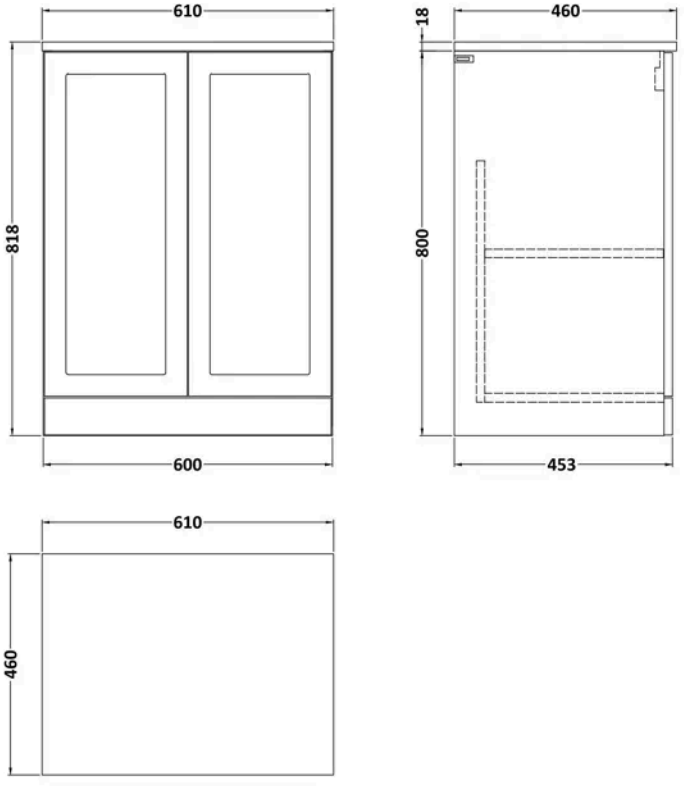

Product Dimensions

Product	818 x 605 x 460mm (H x W x D)
Packaged	550 x 550 x 550mm (H x W x D)
Nett Weight	34 kg
Packaged Weight	34 kg

Product Details

Country of Origin	United Kingdom
Product Material	Mfc Smooth Matt,Natural Marble
Colour/Finish	Matt White
Mount Type	Floor
Style	Traditional
Construction Method	Cam & Wood Dowel
Construction Type	Rigid
Fascia Finish	Mdf Vinyl Smooth Matt
Handles Included	No
Material Thickness	18 mm
No. Doors	2
No. Shelves	1
Number Of Shelves	1
Overflow Included	No
Tap Included	No
Waste Shroud	No

© ROXOR Group

Sales Code: LSH103 **Barcode:** 5056817711863 **Brand:** nuie Lux **Description:** nuie lux Larck 600mm Matt White 2 Door Floor Standing Vanity Unit



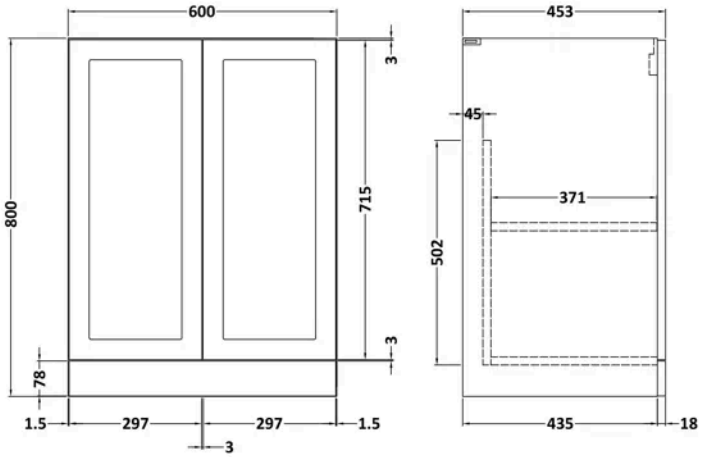

Product Dimensions

Product	800 x 600 x 455mm (H x W x D)
Packaged	820 x 620 x 405mm (H x W x D)
Nett Weight	19.5 kg
Packaged Weight	20 kg

Packaging Details

Box Qty	1

Product Details

Country of Origin	United Kingdom
Product Material	Mfc Smooth Matt
Colour/Finish	Matt White
Mount Type	Floor
Style	Traditional
Construction Method	Cam & Wood Dowel
Construction Type	Rigid
Fascia Finish	Mdf Vinyl Smooth Matt
Handles Included	No
Material Thickness	18 mm
No. Doors	2
No. Shelves	1
Number Of Shelves	1
Waste Shroud	No

© ROXOR Group

Sales Code: LXMT16046 **Barcode:** 5056817728106 **Brand:** nuie Lux **Description:** nuie lux 610 x 460mm Marble Worktop



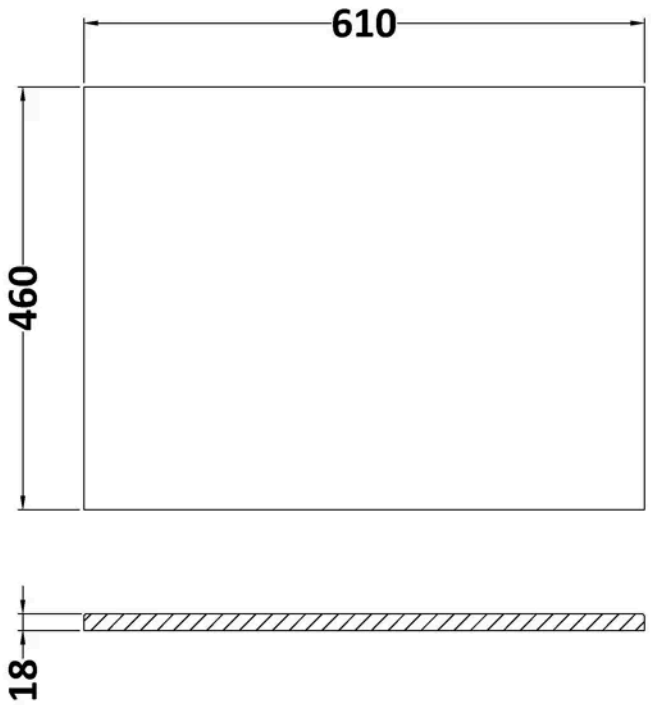

Product Dimensions

Product	18 x 610 x 460mm (H x W x D)
Packaged	35 x 650 x 500mm (H x W x D)
Nett Weight	13.5 kg
Packaged Weight	14 kg

Packaging Details

Box Qty	1
Label Size (mm)	50 x 100
Label Colour	White
Label Qty	1.0000

Product Details

Country of Origin	China
Product Material	Natural Marble
Colour/Finish	White
Style	Contemporary
Fixings Included	No
Fsc Certified	Yes
Material Thickness	18 mm

© ROXOR Group