Sales Code: LSH103A

Barcode: 5056817776152

Brand: nuie Lux

Description: nuie lux Larck 600mm Matt White 2 Door Floor Standing Vanity Unit With 1 Tap Hole Fireclay Basin



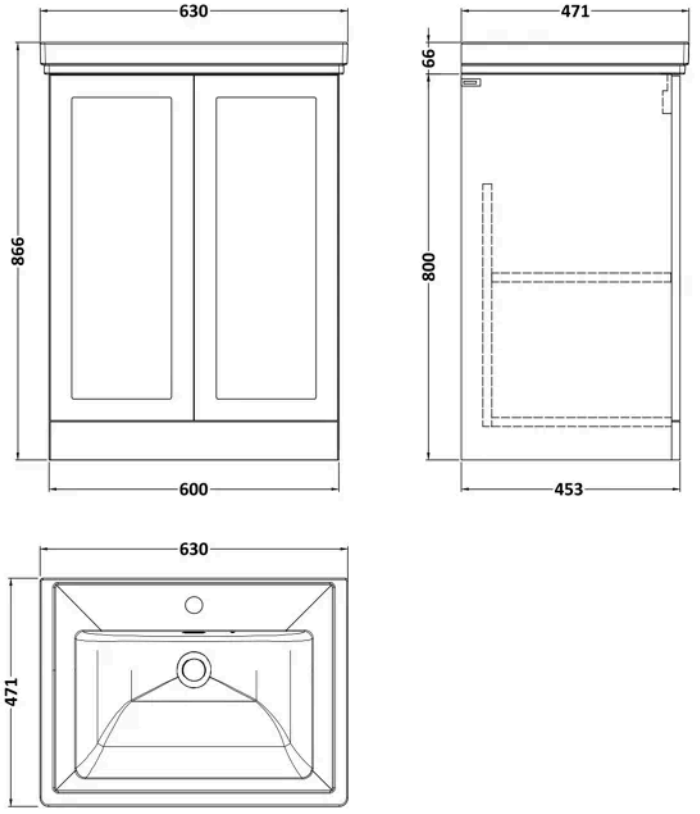

Product Dimensions

Product	866 x 605 x 460mm (H x W x D)
Packaged	550 x 550 x 550mm (H x W x D)
Nett Weight	37 kg
Packaged Weight	37 kg

Product Details

Country of Origin	United Kingdom
Product Material	Fireclay,Mfc Smooth Matt
Colour/Finish	Matt White
Mount Type	Floor
Style	Traditional
Construction Method	Cam & Wood Dowel
Construction Type	Rigid
Fascia Finish	Mdf Vinyl Smooth Matt
Handles Included	No
Inner Bowl Height	135 mm
Material Thickness	18 mm
No. Doors	2
No. Of Tapholes	1
No. Shelves	1
Number Of Bowls	1
Number Of Shelves	1
Overflow Included	Yes
Tap Included	No
Waste Shroud	No

© ROXOR Group

Sales Code: LSH103 **Barcode:** 5056817711863 **Brand:** nuie Lux **Description:** nuie lux Larck 600mm Matt White 2 Door Floor Standing Vanity Unit



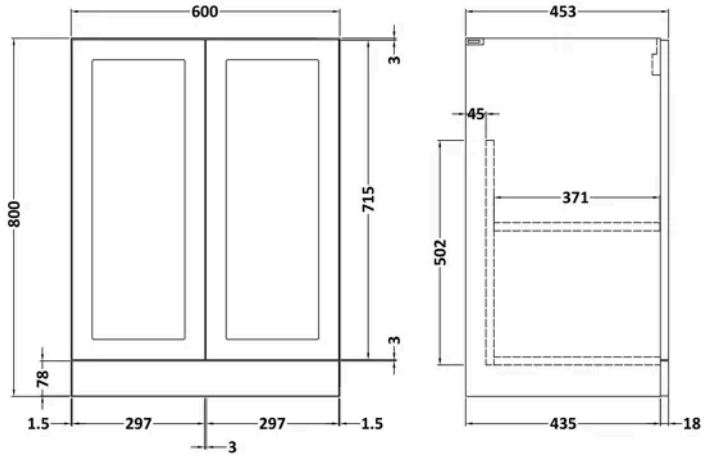

Product Dimensions

Product	800 x 600 x 455mm (H x W x D)
Packaged	820 x 620 x 405mm (H x W x D)
Nett Weight	19.5 kg
Packaged Weight	20 kg

Product Details

Country of Origin	United Kingdom
Product Material	Mfc Smooth Matt
Colour/Finish	Matt White
Mount Type	Floor
Style	Traditional
Construction Method	Cam & Wood Dowel
Construction Type	Rigid
Fascia Finish	Mdf Vinyl Smooth Matt
Handles Included	No
Material Thickness	18 mm
No. Doors	2
No. Shelves	1
Number Of Shelves	1
Waste Shroud	No

© ROXOR Group

Sales Code: LXCB503 **Barcode:** 5056817727963 **Brand:** nuie Lux **Description:** nuie lux 1 Tap Hole 600mm Traditional Fireclay Basin



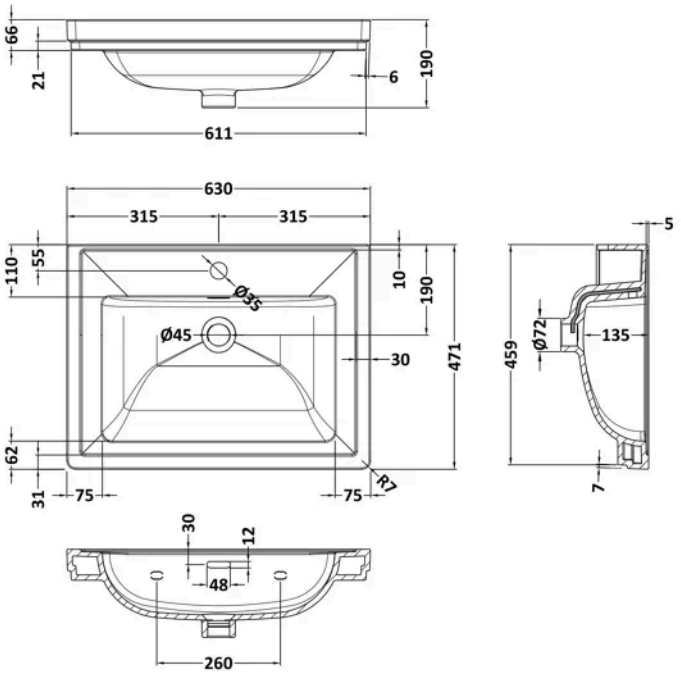

Product Dimensions

Product	190 x 630 x 471mm (H x W x D)
Packaged	490 x 650 x 220mm (H x W x D)
Nett Weight	17 kg
Packaged Weight	17 kg

Packaging Details

Label Size (mm)	50 x 100
Label Colour	White
Label Qty	2.0000

Product Details

Country of Origin	United Arab Emirates
Product Material	Fireclay
Colour/Finish	White
Style	Contemporary
Bottle Trap Included	No
Ce Certified	Yes
Inner Bowl Depth	300 mm
Inner Bowl Height	135 mm
Inner Bowl Width	480 mm
No. Of Tapholes	1
Number Of Bowls	1
Overflow Cover Included	No
Overflow Included	Yes
Tap Included	No
Waste Included	No

© ROXOR Group