Sales Code: LOP812 **Barcode:** 5056462622972 **Brand:** Old London **Description:** Old London 750mm Hunter Green MDF Vinyl Straight End Bath Panel



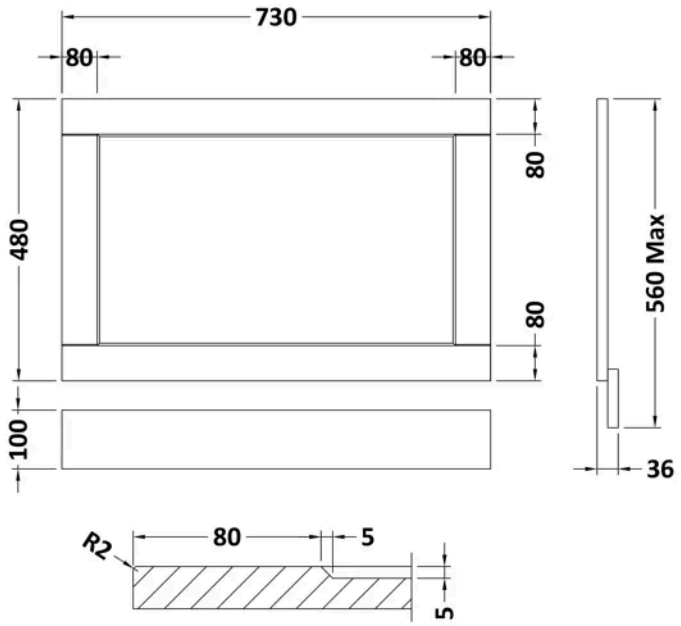

Product Dimensions

Product	560 x 730 x 36mm (H x W x D)
Packaged	610 x 760 x 28mm (H x W x D)
Nett Weight	5.5 kg
Packaged Weight	6 kg

Packaging Details

Box Qty	1

Product Details

Country of Origin	United Kingdom
Product Material	Mdf Vinyl Textured Woodgrain
Colour/Finish	Hunter Green
Style	Traditional
Fixings Included	Yes
Bath Panel Shape	Straight
Bath Panel Type	End Panel
Fsc Certified	Yes

© ROXOR Group