Sales Code: LOP413 **Barcode:** 5056211818373 **Brand:** Old London **Description:** Old London 800mm Timeless Sand MDF Vinyl Straight End Bath Panel



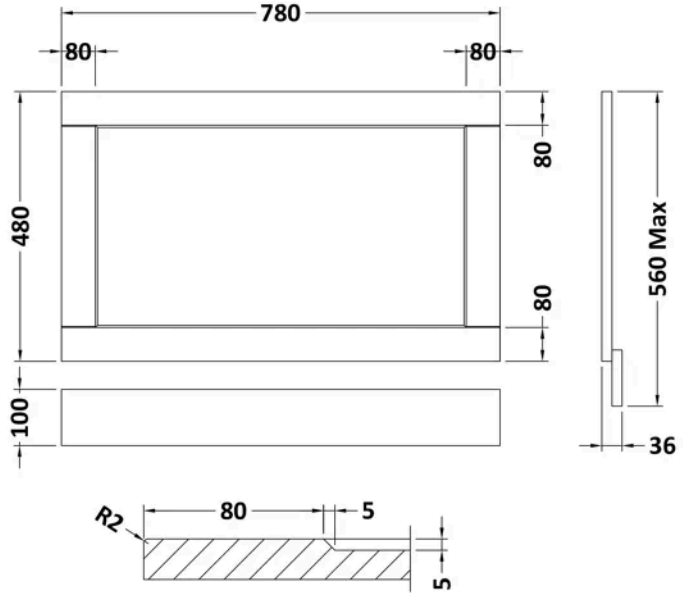

Product Dimensions

Product	560 x 780 x 36mm (H x W x D)
Packaged	610 x 810 x 28mm (H x W x D)
Nett Weight	6 kg
Packaged Weight	6.5 kg

Packaging Details

Box Qty	1

Product Details

Country of Origin	Republic of Ireland
Product Material	Mdf Vinyl Textured Woodgrain
Colour/Finish	Timeless Sand
Style	Traditional
Fixings Included	Yes
Bath Panel Shape	Straight
Bath Panel Type	End Panel
Fsc Certified	Yes

© ROXOR Group